comer industries

GEARBOXES

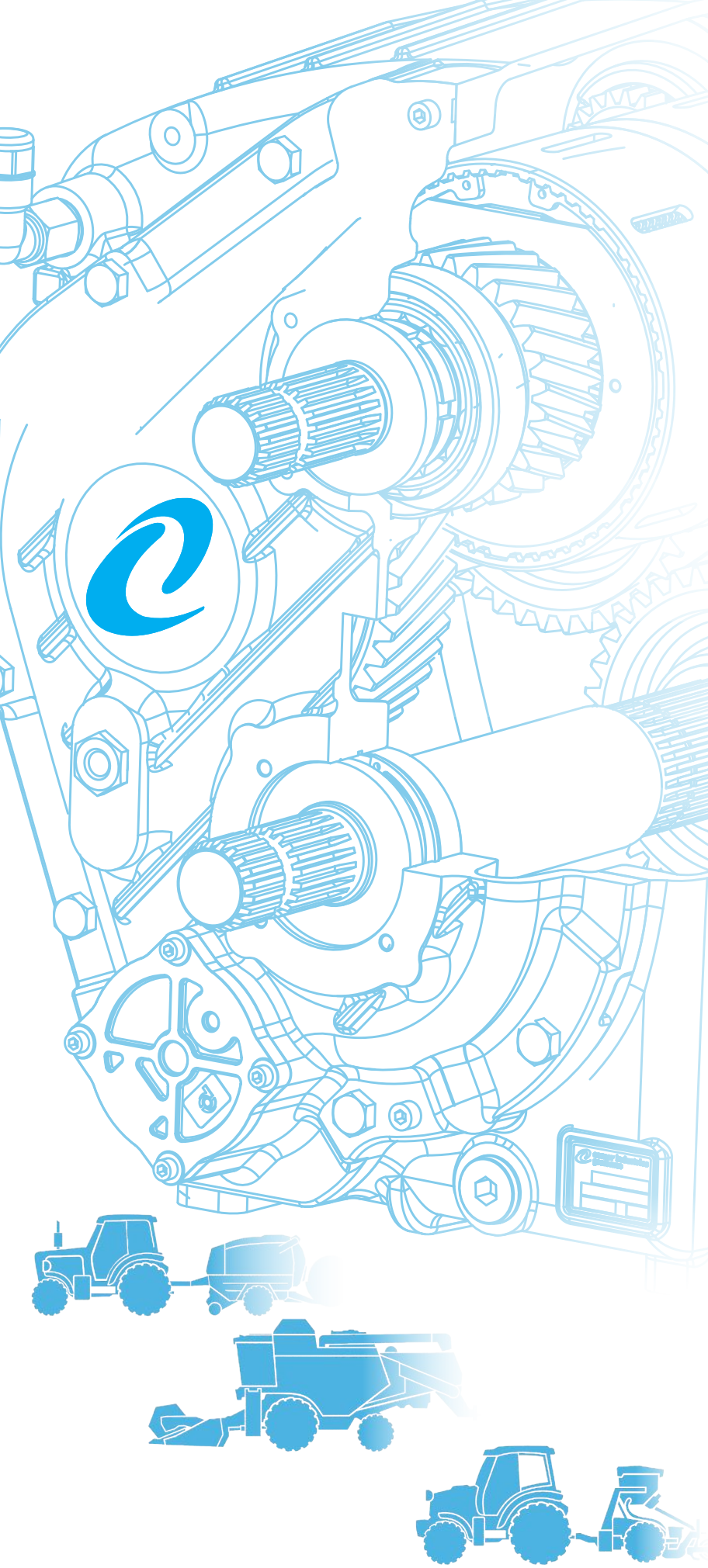

		Applicazioni *Applications*	p.
Profilo aziendale	*Company Profile*		4
APPLICAZIONI STANDARD ***STANDARD APPLICATIONS***		(0.00)	
Rinvii angolari applicazioni generiche	*Generic Application Angular Gearboxes*	(0.01)	6
Rinvii assi paralleli applicazioni generiche	*Generic Application Parallel Gearboxes*	(0.02)	52
MACCHINE PER LA PREPARAZIONE DEL TERRENO ***MACHINERY FOR LAND PREPARATION***		(1.00)	
Trinciastocchi	*Flail Mowers*	(1.01)	66
Falciadistruggierba	*Rotary Mowers*	(1.02)	86
Decespugliatrici	*Rotary Cutters*	(1.03)	
Spandiletame	*Manure Spreaders*	(1.04)	104
Decespugliatori idraulici	*Hydraulic Cutters*	(1.05)	108
MACCHINE PER LA LAVORAZIONE DEL TERRENO **MACHINERY FOR *SOIL TILLAGE***		(2.00)	
Zappatrici - Fresatrici	*Rotary Tillers*	(2.01)	112
Zappatrici multiple	*Multiple Rotary Tillers*	(2.02)	
Erpici rotanti	*Rotary Harrows*	(2.03)	
Trivelle	*Post Hole Diggers*	(2.04)	146
MACCHINE PER IL TRATTAMENDO DELLE COLTURE **MACHINERY FOR *PLANT AND CROP TREATMENT***		(3.00)	
Atomizzatori	*Sprayers*	(3.01)	154

		Applicazioni *Applications*	p.
MACCHINE PER IL TRATTAMENDO DELLE COLTURE **MACHINERY FOR *PLANT AND CROP TREATMENT***		(3.00)	
Spandiconcime	*Fertlizer Spreaders*	(3.02)	164
Pompe centrifughe per irrigazione	*Centrifugal Pumps for Irrigation*	(3.03)	170
Irrigatori a bobina	*Irrigation Reels*	(3.04)	
MACCHINE PER FIENAGIONE ***MACHINERY FOR FORAGE AND HAY***		(4.00)	
Falciatrici rotative	*Cutter Bars*	(4.01)	182
Giroandanatori	*Rotary Rakes*	(4.02)	194
Spandifieno rotativi	*Rotary Tedders*	(4.05)	
Presse raccoglitrici	*Round Balers*	(4.04)	210
MACCHINE PER LA MISCELAZIONE E DISTRIBUZIONE FORAGGIO ***MACHINERY FOR MIXING AND DISTRIBUTION OF FORAGE***		(4.00)	
Carri miscelatori	*Feed Mixer Machines*	(4.06)	216
Lancia paglia	*Straw Blower*	(4.09)	
MACCHINE PER TESTATE DA MAIS E CEREALI ***MACHINERY FOR CORN HEADER AND GRAIN HEADER***		(4.00)	
Punte da mais	*Corn Headers*	(4.08)	238
Gruppi per testate da grano e girasoli	*Grain Header and Sunflower Headers*	(4.10)	244
APPLICAZIONI VARIE ***MISCELLANEOS APPLICATIONS***		(5.00)	
Gruppi elettrogeni	*P.T.O. Generators*	(5.01)	250
Seghe circolari - a nastro	*Circular Saws - Belt Saws*	(5.02)	

IT INDICE — EN *INDEX*

		Applicazioni *Applications*	p.
MIETITREBBIA E TRINCIA SEMOVENTE ***COMBINE AND FORAGE HARVESTER***		(6.00)	
Cinematismi per mietitrebbie	*Combine Harvester Solution*	(6.01)	264
Cinematismi per trincia semoventi	*Forage Harvester Driveline Solution*	(6.02)	266
Cinematismi per macchine semoventi	*Self-propelled Windrower Solution*	(6.03)	268
INDICE ANALITICO ***ANALYTICAL INDEX***			270

IT SIMBOLOGIA — EN *SYMBOLS*

i	Rapporto di riduzione *Reduction ratio*
= =	Rinvio *Gear unit 1:1 ratio*
− +	Moltiplicatore *Speed increasing unit*
+ −	Riduttore *Speed reduction unit*
OIL [l]	Quantità lubrificante *Oil (or grease) quantity*
GREASE [kg]	
kg	Peso *Weight*
CW	Rotazione oraria *Clock Wise Rotation*
CCW	Rotazione antioraria *Counter Clock Wise Rotation*

	Alberi scanalati maschio *Splined male shafts*
	Albero cilindrico maschio con linguetta *Cylindrical male shaft with key*
	Albero cilindrico femmina con linguetta *Cylindrical female shaft with key*
	Albero cilindrico maschio con fori ortogonali *Cylindrical male shaft with cross holes*
	Albero scanalato femmina *Splined female shafts*
conical	Albero conico maschio *Conical male shaft*
	Albero esagonale femmina *Hexagonal female shaft*

Comer Industries è leader globale nelle **soluzioni di meccatronica** e nei **sistemi integrati** per la trasmissione di potenza, destinati ai **principali costruttori mondiali** di **macchine** per l'**agricoltura** e l'**industria**.

L'attività produttiva è strutturata su **cinque stabilimenti in Italia** nelle province di Reggio Emilia, Mantova e Matera, a cui si aggiungono uno stabilimento in **Cina** (Shaoxing) e uno in **India** (Bangalore).

Per sviluppare e testare soluzioni all'avanguardia, Comer Industries si avvale del proprio **Centro Ricerche di Meccatronica**, nato nel 1996 e dotato delle ultime tecnologie e strumenti di sperimentazione.

Gli **stabilimenti** Comer Industries nel mondo sono stati progettati secondo i principi del **World Class Manufacturing (WCM)**, una metodologia produttiva integrata di ispirazione giapponese ma sviluppata negli USA negli anni '90 che coinvolge l'intera organizzazione, dalla sicurezza all'ambiente, dalla manutenzione alla logistica e alla qualità, con l'obiettivo della sistematica riduzione degli sprechi per ottenere zero difetti, zero guasti, zero incidenti e zero scorte.

Comer Industries progetta, realizza e si propone al mercato con un'ampia gamma di **trasmissioni standard e soluzioni per la trasmissione di potenza personalizzate**, come gearboxes, driveshafts, planetary gearboxes e powertrain per applicazioni industriali e agricole.

Una completa **gamma standard di riduttori angolari e ad assi paralleli multifunzione**, adatti a varie tipologie di macchine agricole, sono soluzioni in grado di rispondere alle domande del mercato. Possono essere integrati con gli altri prodotti Comer Industries di gamma quali Powertrain, Driveshafts e Planetary Drives per formare una soluzione completa della trasmissione di potenza richiesta dall'applicazione.

Comer Industries può offrire inoltre **prodotti standard per applicazioni specifiche**, come, ad esempio, gearboxes per macchine dedicate alla preparazione e lavorazione del terreno, per la miscelazione e la distribuzione del foraggio.
Trasmissioni di potenza personalizzate possono essere prodotte per una grande varietà di applicazioni, in grado di soddisfare le necessità dei costruttori.

Comer Industries presidia i principali mercati esteri con le proprie **filiali commerciali** in Francia, Germania, Regno Unito, Stati Uniti, Brasile, Cina e India.

*Comer Industries is a global leader in **mechatronic solutions** and **integrated systems for power transmission**, supplied to **major manufacturers** of **agricultural** and **industrial machinery** worldwide.*

***Industrial operations** are structured in **five plants in Italy**, one facility in **China** (Shaoxing) and one in **India** (Bangalore).*

*To develop and test advanced product solutions, Comer Industries relies on its **Mechatronics Research Center**, established in 1996 and equipped with the latest technologies and experimental tools.*

*Comer Industries plants worldwide have been designed following the principles of **World Class Manufacturing (WCM)**, a Japanese work-based integrated production methodology developed in the USA in the 1990s which involves the entire organization, from safety to environment, maintenance, logistics and quality. It targets the elimination of all wastes with the ultimate objective of achieving zero defects, zero accidents, zero breakdowns and zero inventory.*

*Comer Industries designs, manufactures and offers a wide product range of **standard and highly customized advanced power transmissions** such as gearboxes, driveshafts, planetary gearboxes and powertrain for agricultural and industrial applications.*

*A complete **standard product range of bevel and parallel axis gearboxes**, suitable for several agricultural equipment are solutions that meet main market demands. They can be integrated with other Comer Industries standard products from the ranges Powertrain, Driveshafts and Planetary Drives to form a complete power transmission solution as required by the specific application.*

*Comer Industries can also offer **standard products for specific applications**, such as gearboxes for land preparation, soil tillage, mixing and forage distribution machines.*
***Customized transmissions** can be produced for a wide variety of applications, in order to respond to OEM's needs.*

*The company operates in the major world markets through its own **sales subsidiaries** in France, Germany, United Kingdom, United States, Brazil, China and India.*

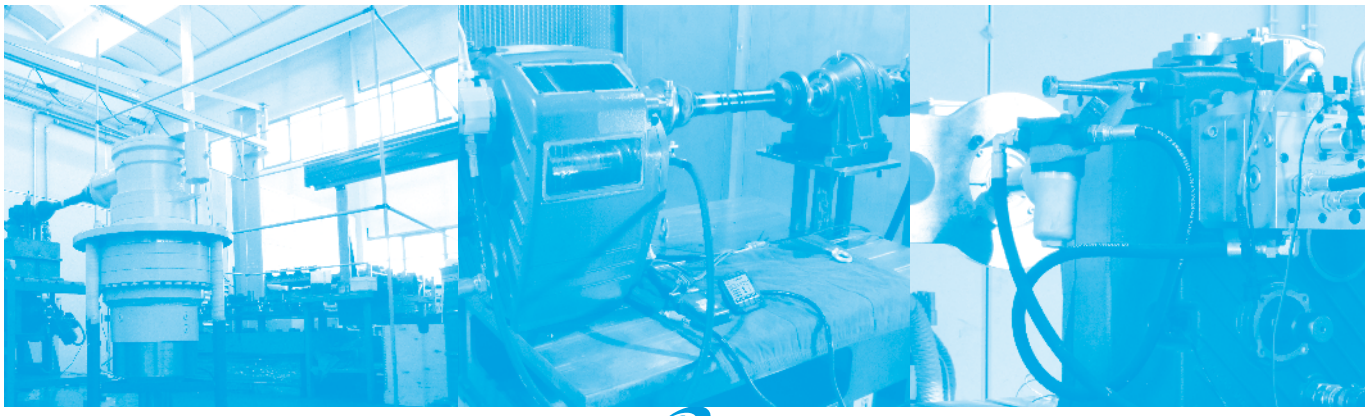

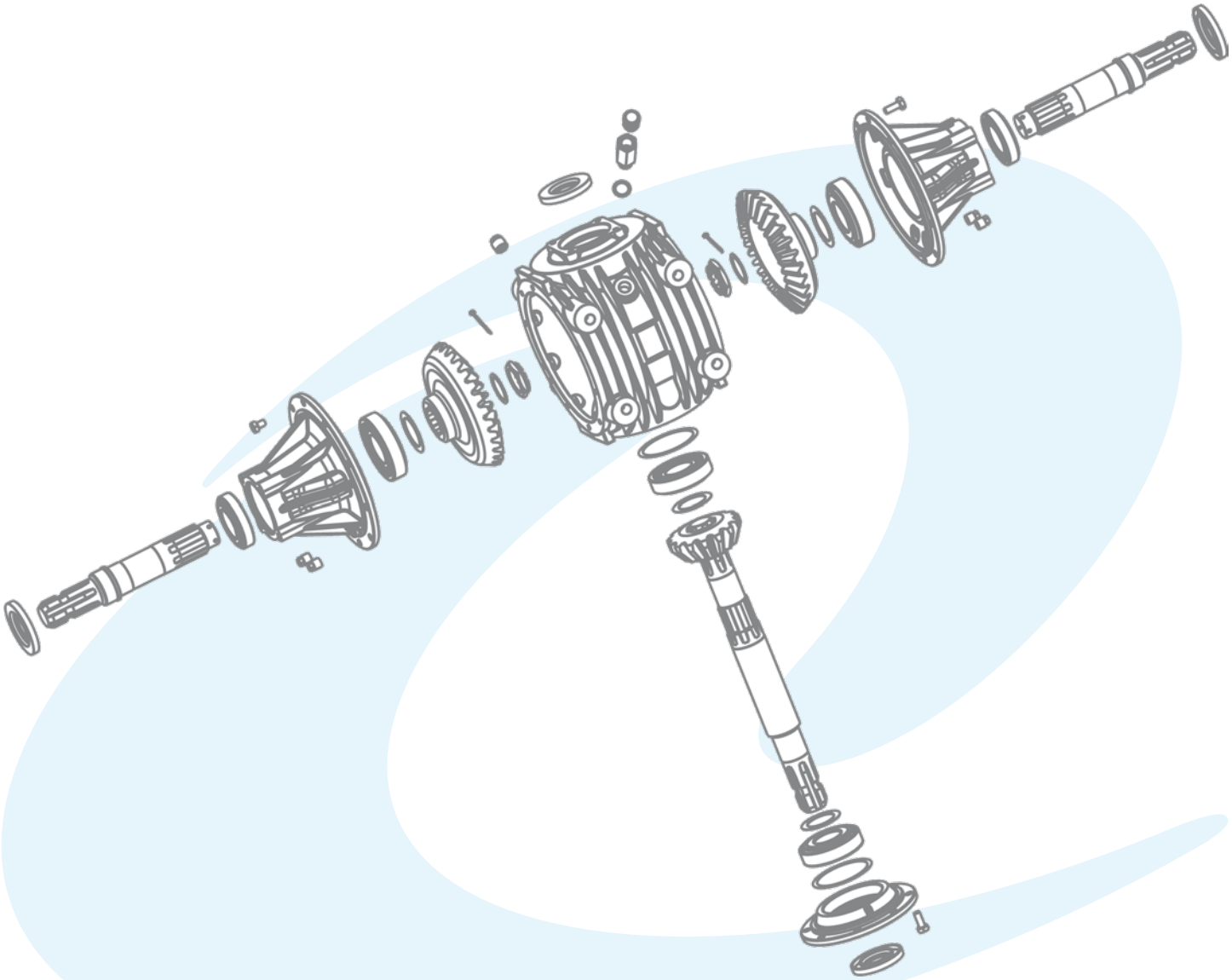

Per configurazioni non a catalogo contattare Servizio Tecnico-Commerciale
For non-catalog configurations contact Technical-Commercial Service

(0.01)

Gamma angolari multifunzione
Multifunction Angular Gearboxes

RINVII ANGOLARI
ANGULAR GEARBOXES

(0.01)

	i	P_{1-max} [kW]	M_{2-max} [Nm]	Tipologia alberi disponibili *Available type of shafts*	p.
L-150J	M ⇨ + ⇨ - - ⇨ = ⇨ 1.00 R ⇨ + ⇨ -	8.0	137	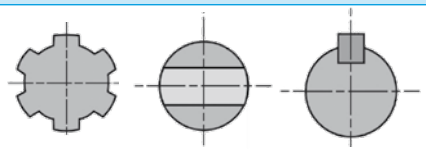	11
L-5A	M ⇨ + ⇨ 1.90÷3.00 - ⇨ = ⇨ 1.00 R ⇨ + ⇨ 1.90÷2.78	11.0	228	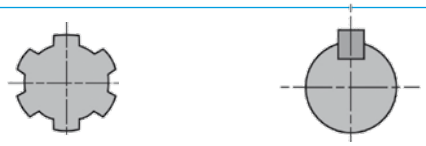	12
L-25A **L-25J**	M ⇨ + ⇨ 1.25÷3.00 - ⇨ = ⇨ 1.00 R ⇨ + ⇨ 1.90÷3.30	11.0	228	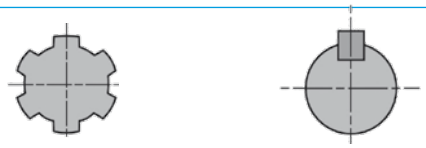	14
T-281A **T-281J**	M ⇨ + ⇨ 1.35÷2.91 - ⇨ = ⇨ 1.00 R ⇨ + ⇨ 1.46÷2.91	17.0	292	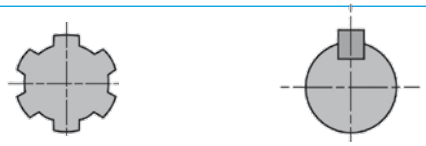	16
T-19A	M ⇨ + ⇨ 1.20÷2.91 - ⇨ = ⇨ 1.00 R ⇨ + ⇨ 1.46÷2.91	40.4	693	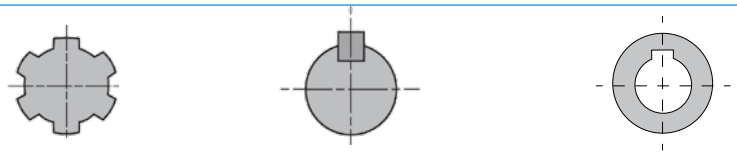	18
T-27A **T-27J**	M ⇨ + ⇨ 1.35÷1.92 - ⇨ = ⇨ 1.00 R ⇨ + ⇨ 1.35÷1.92	40.5	850	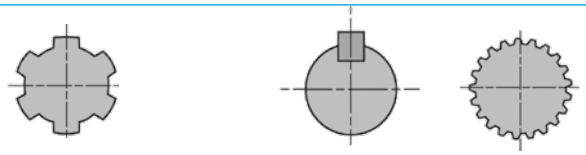	20
T-28J	M ⇨ + ⇨ 1.35 - ⇨ = ⇨ - R ⇨ + ⇨ -	40.4	513	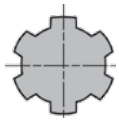	22
T-310A **T-310J**	M ⇨ + ⇨ 1.60÷3.00 - ⇨ = ⇨ - R ⇨ + ⇨ -	31.5	337		24
T-304A	M ⇨ + ⇨ 1.93÷4.50 - ⇨ = ⇨ - R ⇨ + ⇨ 1.93÷4.50	40.4	947		26
T-278A	M ⇨ + ⇨ 1.92÷2.91 - ⇨ = ⇨ 1.00 R ⇨ + ⇨ 1.35÷2.91	54.0	1212	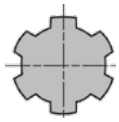	28

RINVII ANGOLARI
ANGULAR GEARBOXES

(0.01)

	i	$P_{1\text{ - max}}$ [kW]	$M_{2\text{ - max}}$ [Nm]	Tipologia alberi disponibili *Available type of shafts*	p.
T-311A T-311J	M 1.60÷3.00 - - R -	44.4	449	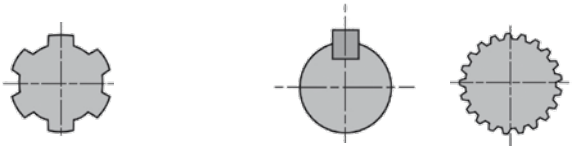	30
T-312A T-312J T-312ALL	M 1.60÷3.00 - - R -	76.5	709		32
T-312HD	M 3.17÷3.91 - - R -	50	146	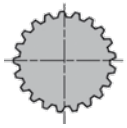	34
T-290A	M 1.46÷3.00 - 1.00 R 1.47÷3.00	69.8	1828		36
T-290HD	M 3.00 - - R 3.00	96	1694		38
T-292B	M 1.46÷1.86 - 1.00 R 1.47÷1.86	62.5	1576		39
T-279A/J	M 1.35÷1.50 - 1.00 R 1.35	73.5	1533	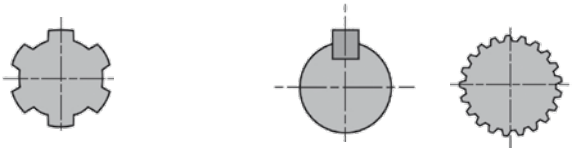	40
T-22A	M 1.60÷6.14 - - R 1.60÷6.14	72.1	2007	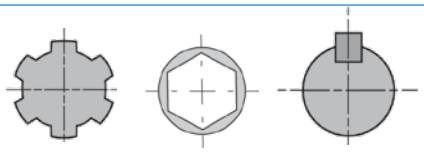	42
T-269A	M 1.35÷1.63 - 1.00 R 1.35÷1.63	77.3	1747	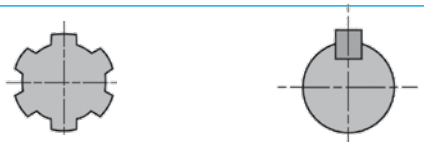	44
T-269B	M 1.42÷3.00 - 1.00 R 1.42÷3.00	77.3	2007	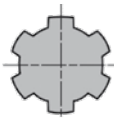	45

Per configurazioni non a catalogo contattare Servizio Tecnico-Commerciale
For non-catalog configurations contact Technical-Commercial Service

RINVII ANGOLARI
ANGULAR GEARBOXES

(0.01)

	i	$P_{1\text{ - max}}$ [kW]	$M_{2\text{ - max}}$ [Nm]	Tipologia alberi disponibili *Available type of shafts*	p.
T-301B	M 1.35÷1.93 - 1.00 R 1.35÷3.00	152.2	7831		46
T-331A	M 1.35÷3.27 - 1.00 R 1.35÷3.27	331.0	4891		48
T-332A	M 1.94 - - R 1.90÷4.25	257.8	6432		50

Questa pagina è lasciata intenzionalmente bianca
This page is intentionally left blank

L-150J

Code **150.8**

(0.01)

[kg] 3.5 | GREASE [kg] 0.2

Per configurazioni non a catalogo contattare Servizio Tecnico-Commerciale
For non-catalog configurations contact Technical-Commercial Service

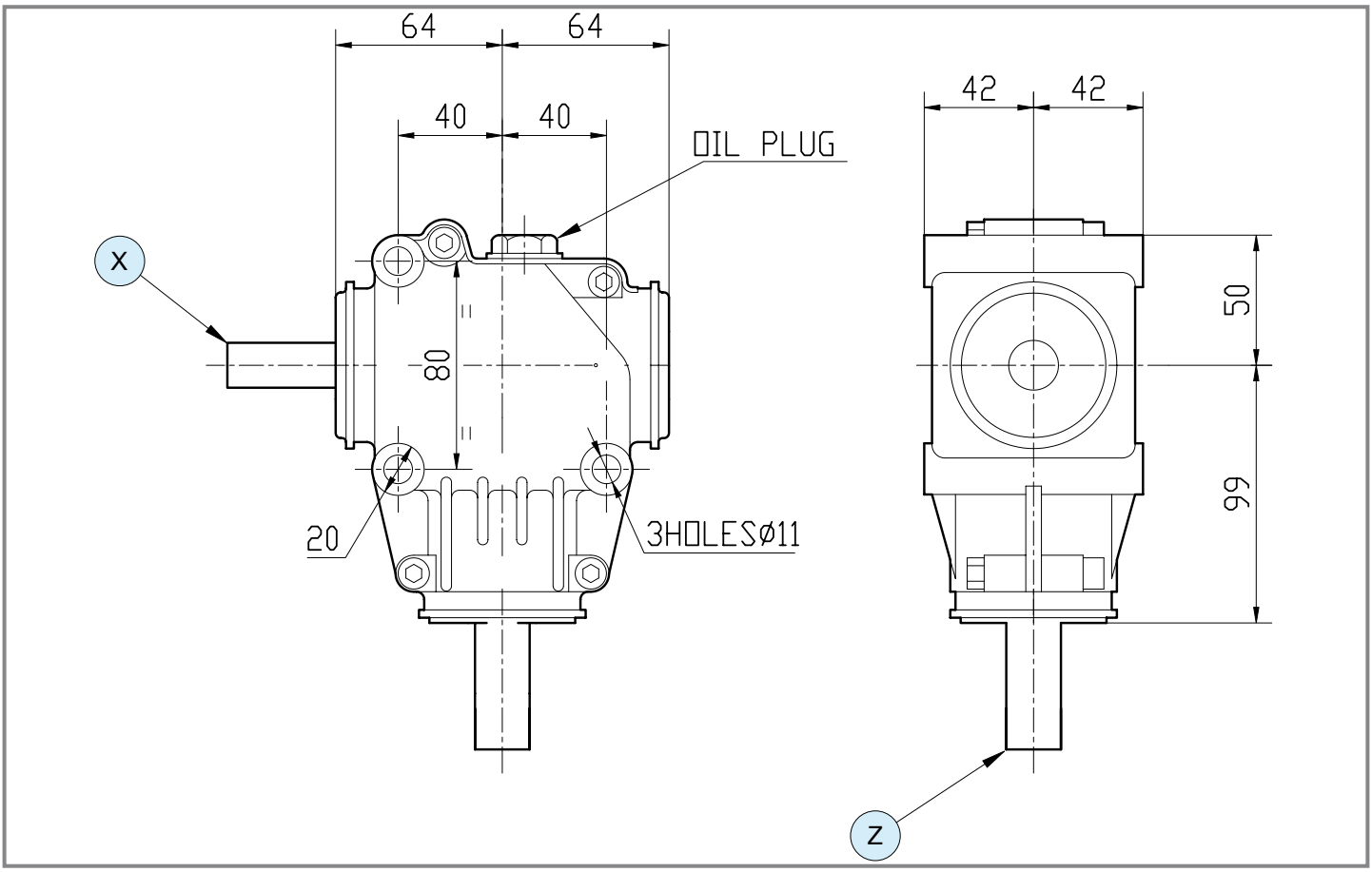

	i	N_1 [rpm]	P_1 [kW]	M_2 [Nm]	Shaft type X	Shaft type Y	Shaft type Z	Input	Features	Code	Mounting	
-	**1.00**	540	8.0	137	13 L 80 ø 25 n.2 ø8	-	1 1" 3/8 Z6	Z	-	9.150.800	1 2 in in	std
-	**1.00**	540	8.0	137	12 L 74 ø 25	-	12 L 54 ø 25	Z	-	9.150.810	1 2 in in	std
	1.00	540	8.0	137	19 L 38 ø 3/4"	-	19 L 38 ø 3/4"	Z	-	9.150.885	1 2 in in	std

L-5A

Code **104**

(0.01)

[kg]	8	[l]	0.4

Per configurazioni non a catalogo contattare Servizio Tecnico-Commerciale
For non-catalog configurations contact Technical-Commercial Service

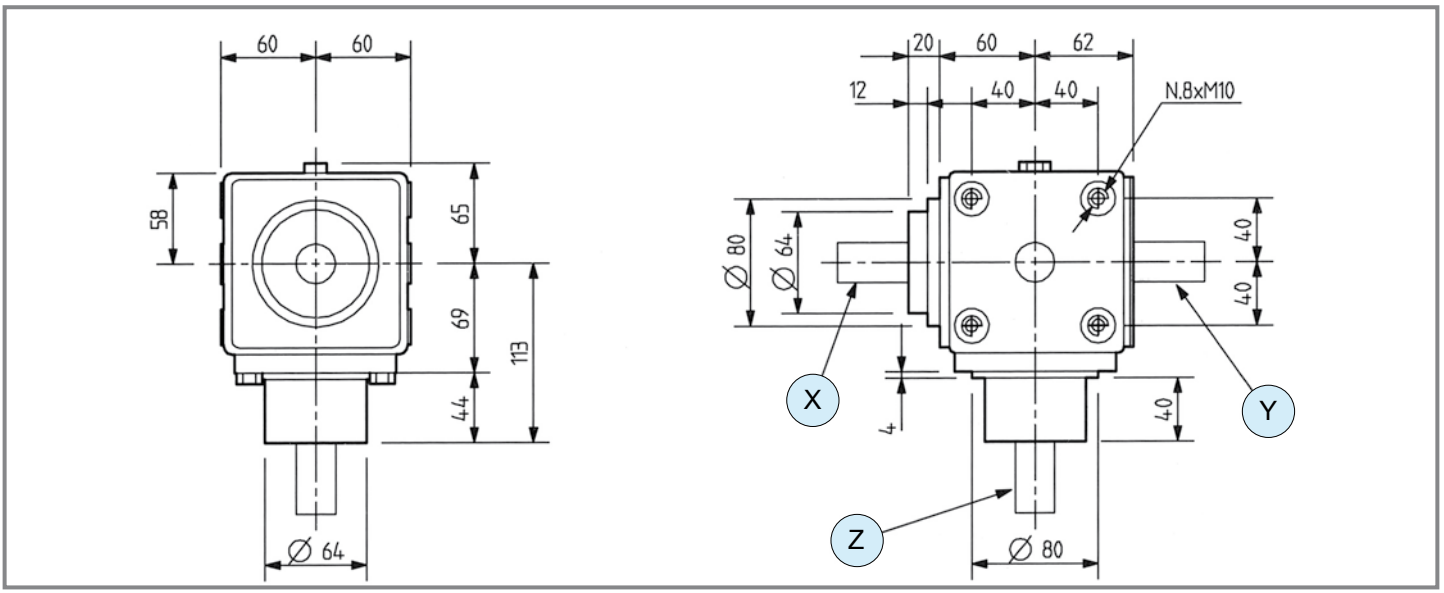

1 - Ruota libera / *Free wheel*

	i	N_1 [rpm]	P_1 [kW]	M_2 [Nm]	Shaft type X	Shaft type Y	Shaft type Z	Input	Features	Code	Mounting	
M ⇨ +	**3.00**	540	5.1	29	16 L 52 ø 22	-	16 L 70 ø 22	X	1 ccw	9.104.628	21 22	std
	3.00	540	5.1	29	16 L 52 ø 22	-	16 L 70 ø 22	X	1 ccw	9.104.630	23 24	std
	3.00	540	5.1	29	12 L 52 ø 25	-	12 L 57 ø 25	X	1 ccw	9.104.648	23 24	std
	2.78	540	5.1	31	1 1" 3/8 Z6	-	12 L 48 ø 25	Z	-	9.104.381	21 22	std
	1.90	540	11.0	99	12 L 60 ø 25	12 L 58 ø 25	1 1" 3/8 Z6	Z	-	9.104.322	33 34	std
	1,90	540	11,0	99	-	1 1" 3/8 Z6	12 L 72 ø 25	Y	-	9.104.906	23 24	std
	1,90	540	11,0	99	-	1 1" 3/8 Z6	12 L 72.5 ø 25	Y	-	9.104.368	23 24	std
	1,35	540	9,9	126	12 L 60 ø 25	12 L 58 ø 25	1 1" 3/8 Z6	Z	-	9.104.484	5 6	std
- ⇨ =	**1.00**	540	11.0	189	12 L 50 ø 25	-	1 1" 3/8 Z6	Z	-	9.104.000	1 2	std
	1.00	540	11.0	189	12 L 60 ø 25	12 L 60 ø 25	12 L 62 ø 25	Z	-	9.104.010	5 6	std
	1,00	540	11,0	189	12 L 50 ø 25	-	12 L 61.5 ø 25	Z	-	9.104.006	1 2	std
	1,00	540	11,0	189	-	12 L 46.5 ø 25	12 L 61.5 ø 25	Z	-	9.104.016	3 4	std

comer industries

L-5A

Code **104**

(0.01)

	i	N_1 [rpm]	P_1 [kW]	M_2 [Nm]	Shaft type X	Shaft type Y	Shaft type Z	Input	Features	Code	Mounting	
-	**1,00**	540	11,0	189	1 — 1" 3/8 Z6	-	1 — 1" 3/8 Z6	Z	-	9.104.203	21 22	std
R	**1.90**	540	7.0	228	12 — L 60 — ø 25	12 — L 58 — ø 25	12 — L 72 — ø 25	Z	-	9.104.013	5 6	std
	1.90	540	7.0	228	1 — 1" 3/8 Z6	-	12 — L 72 — ø 25	Z	-	9.104.014	1 2	std
	1.90	540	7.0	228	12 — L 50 — ø 25	-	12 — L 72 — ø 25	Z	-	9.104.487	1 2	std
	1,90	540	7,0	228	-	12 — L 46.5 — ø 25	12 — L 72 — ø 25	Z	-	9.104.024	3 4	std
	2.78	540	2.9	138	12 — L 60 — ø 25	12 — L 58 — ø 25	1 — 1" 3/8 Z6	Z	-	9.104.037	5 6	std
	2.78	540	2.9	138	-	12 — L 46.5 — ø 25	12 — L 47 — ø 25	Z	-	9.104.142	3 4	std

L-25J | L-25A

L-25J Code **124.8**

L-25A Code **124**

(0.01)

[kg] 4.1 | GREASE [kg] 0.35

Per configurazioni non a catalogo contattare Servizio Tecnico-Commerciale
For non-catalog configurations contact Technical-Commercial Service

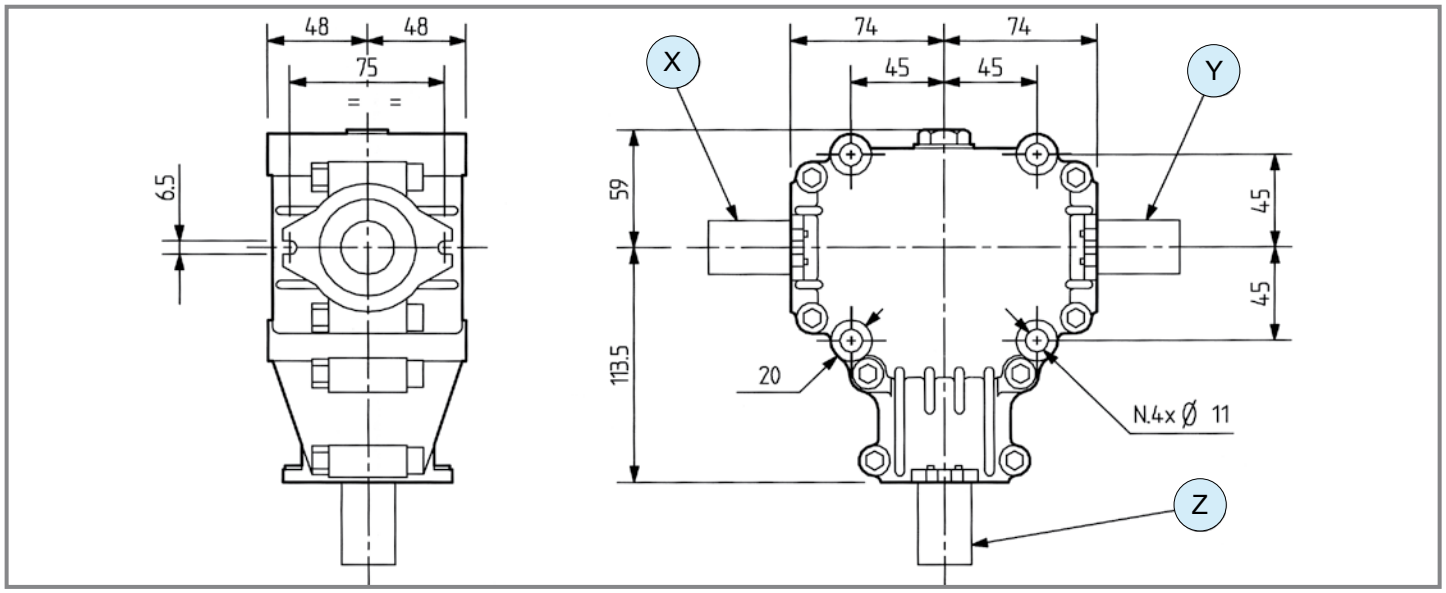

1 - Ruota libera / *Free wheel*

	i	N_1 [rpm]	P_1 [kW]	M_2 [Nm]	Shaft type X	Shaft type Y	Shaft type Z	Input	Features	Code	Mounting	
	3.00	540	11.0	63	1 — 1" 3/8 Z6	-	12 — L 69.5 — ø 25	X	1	9.124.895	21 22	std
	3.00	540	5.1	29	1 — 1" 3/8 Z6	-	16 — L 69.5 — ø 22	X	1	9.124.878	21 22	std
	3.00	540	5.1	29	1 — 1" 3/8 Z6	-	16 — L 69.5 — ø 22	X	1	9.124.879	23 24	std
	2.78	540	5.1	31	1 — 1" 3/8 Z6	-	16 — L 45 — ø 22	X	-	9.124.034	21 22	std
	1.90	540	11.0	99	12 — L 54 — ø 25	12 — L 54 — ø 25	1 — 1" 3/8 Z6	Z	-	9.124.912	33 34	std
	1.90	540	11.0	99	12 — L 54 — ø 25	12 — L 54 — ø 25	12 — L 61.5 — ø 25	Z	-	9.124.032	33 34	std
M	**1.90**	540	11.0	99	12 — L 54 — ø 25	-	12 — L 72 — ø 25	X	-	9.124.019	23 24	std
	1.90	540	11.0	99	12 — L 54 — ø 25	12 — L 54 — ø 25	12 — L 72 — ø 25	X	-	9.124.020	25 26	std
	1.90	540	11.0	99	1 — 1" 3/8 Z6	-	16 — L 60 — ø 22	X	-	9.124.873	23 24	std
	1.90	540	11.0	99	1 — 1" 3/8 Z6	-	16 — L 60 — ø 22	X	-	9.124.874	21 22	std
	1.35	540	9.9	126	17 — L 70 — ø 25 — n.2 ø8	-	1 — 1" 3/8 Z6	Z	-	9.124.880	29 30	std
	1.25	675	10.0	110	13 — L 43.5 — ø 25 — n.1 ø8	-	12 — L 61.5 — ø 25	Z	-	9.124.897	29 30	std

comer industries

L-25J

Code **124.8**

L-25A

Code **124**

(0.01)

	i	N_1 [rpm]	P_1 [kW]	M_2 [Nm]	Shaft type X	Shaft type Y	Shaft type Z	Input	Features	Code	Mounting	
M	**1.25**	540	10.0	137	12 L 54 ø 25	12 L 54 ø 25	1 1" 3/8 Z6	Z	-	9.124.896	33 34	std
	1.00	540	11.0	189	17 L 70 ø 25 n.2 ø8	-	1 1" 3/8 Z6	Z	-	9.124.800	1 2	std
	1.00	540	11.0	189	12 L 61.5 ø 25	-	12 L 61.5 ø 25	Z	-	9.124.813	3 4	std
	1.00	540	11.0	189	17 L 165 ø 25 n.2 ø8	-	1 1" 3/8 Z6	Z	-	9.124.870	1 2	std
	1.00	540	11.0	189	17 L 70 ø 25 n.2 ø8	-	1 1" 3/8 Z6	Z	-	9.124.881	1 2	std
-	**1.00**	540	11.0	189	12 L 54 ø 25	12 L 54 ø 25	12 L 61.5 ø 25	Z	-	9.124.006	5 6	std
	1.00	540	11.0	189	1 1" 3/8 Z6	-	1 1" 3/8 Z6	Z	-	9.124.012	1 2	std
	1.00	540	11.0	189	12 L 54 ø 25	12 L 54 ø 25	1 1" 3/8 Z6	Z	-	9.124.017	5 6	std
	1.00	540	11.0	189	12 L 54 ø 25	12 L 54 ø 25	12 L 61.5 ø 25	Z	-	9.124.806	33 34	std
	1.35	540	8.1	386	12 L 54 ø 25	-	1 1" 3/8 Z6	Z	-	9.124.011	1 2	std
	1.35	540	8.1	188	12 L 54 ø 25	12 L 54 ø 25	12 L 61.5 ø 25	Z	-	9.124.016	5 6	std
	1.35	540	8.1	185	12 L 54 ø 25	12 L 54 ø 25	1 1" 3/8 Z6	Z	-	9.124.018	5 6	std
	1.90	540	7.0	228	12 L 54 ø 25	-	12 L 72 ø 25	Z	-	9.124.004	1 2	std
R	**1.90**	540	7.0	228	12 L 54 ø 25	-	12 L 72 ø 25	Z	-	9.124.019	3 4	std
	2.78	540	2.9	138	12 L 54 ø 25	-	12 L 47 ø 25	Z	-	9.124.021	1 2	std
	2.78	540	2.9	138	12 L 54 ø 25	12 L 54 ø 25	12 L 47 ø 25	Y	-	9.124.022	5 6	std
	2.78	540	2.9	138	12 L 54 ø 25	-	12 L 47 ø 25	Z	-	9.124.671	1 2	std
	3.30	540	2.2	125	12 L 54 ø 25	12 L 54 ø 25	12 L 59.5 ø 25	Z	-	9.124.111	5 6	std

T-281J | T-281A

Code **281.8** | Code **281**

(0.01)

[kg] 7 | [l] 0.5

Per configurazioni non a catalogo contattare Servizio Tecnico-Commerciale
For non-catalog configurations contact Technical-Commercial Service

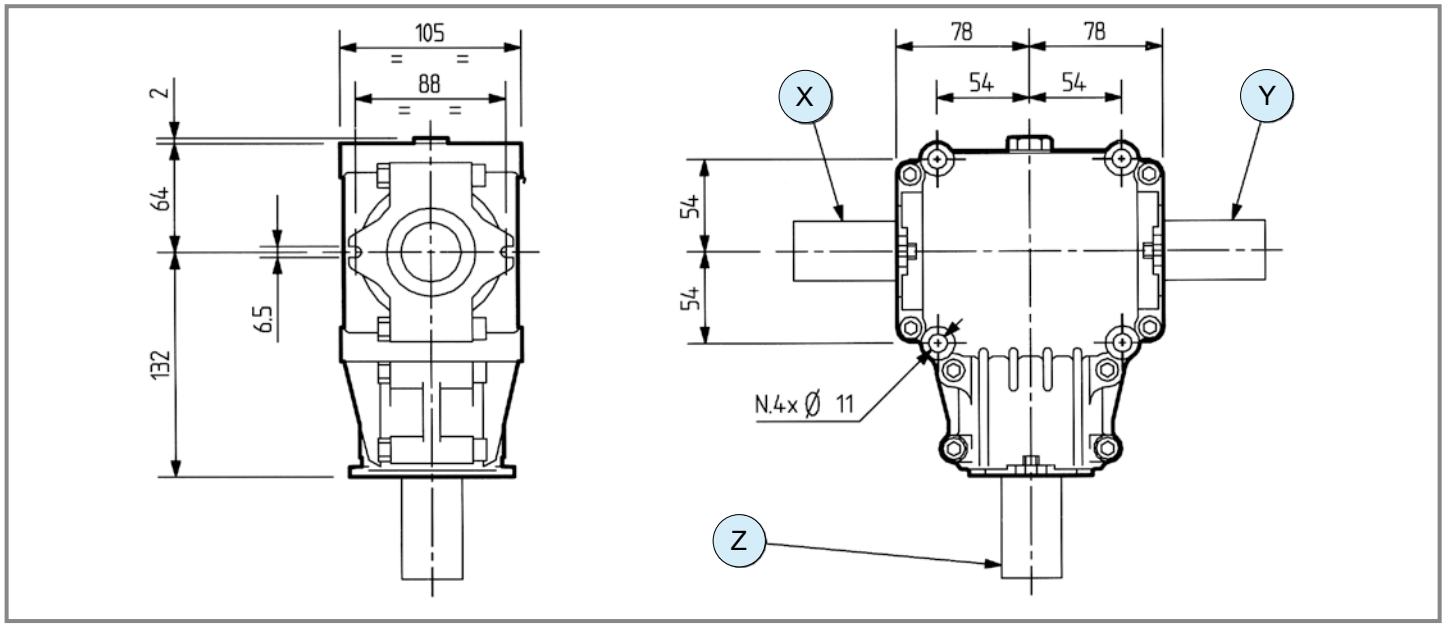

1 - Ruota libera / *Free wheel*

	i	N_1 [rpm]	P_1 [kW]	M_2 [Nm]	Shaft type X	Shaft type Y	Shaft type Z	Input	Features	Code	Mounting	
M	2.91	540	8.1	48	1 – 1" 3/8 Z6	1 – 1" 3/8 Z6	1 – 1" 3/8 Z6	X	-	9.281.024	25 26	std
M	2.91	540	8.1	48	1 – 1" 3/8 Z6	-	18 – L 60 ø 30	X	1 ccw	9.281.874	21 22	std
M	2.91	540	8.1	48	1 – 1" 3/8 Z6	-	18 – L 60 ø 30	X	1 ccw	9.281.878	23 24	std
M	2.16	540	10.3	82	1 – 1" 3/8 Z6	1 – 1" 3/8 Z6	1 – 1" 3/8 Z6	X	-	9.281.022	25 26	std
M	1.84	540	12.5	117	18 – L 60 ø 30	18 – L 60 ø 30	1 – 1" 3/8 Z6	Z	-	9.281.009	33 34	std
M	1.84	540	12.5	117	1 – 1" 3/8 Z6	-	1 – 1" 3/8 Z6	X	-	9.281.020	23 24	std
M	1.84	540	12.5	117	1 – 1" 3/8 Z6	1 – 1" 3/8 Z6	1 – 1" 3/8 Z6	Z	-	9.281.081	33 34	std
M	1.35	540	14.7	187	18 – L 61.7 ø 30	-	18 – L 58 ø 30	Z	-	9.281.880	29 30	std
-	1.00	540	16.9	292	1 – 1" 3/8 Z6	1 – 1" 3/8 Z6	1 – 1" 3/8 Z6	Z	-	9.281.012	5 6	std
-	1.00	540	16.9	292	18 – L 60 ø 30	18 – L60 ø 30	1 – 1" 3/8 Z6	Z	-	9.281.879	5 6	std
-	1.00	540	16.9	292	1 – 1" 3/8 Z6	-	1 – 1" 3/8 Z6	X	-	9.281.014	21 22	std

T-281J

Code **281.8**

T-281A

Code **281**

(0.01)

	i	N_1 [rpm]	P_1 [kW]	M_2 [Nm]	Shaft type X	Shaft type Y	Shaft type Z	Input	Features	Code	Mounting	
-	**1.00**	540	16.9	290	1 1" 3/8 Z6	-	1 1" 3/8 Z6	Z	-	9.281.891	3 4	std
-	**1.00**	540	16.9	292	18 L 62 ø 30	-	1 1" 3/8 Z6	Z	-	9.281.026	1 2	std
-	**1.00**	540	16.9	290	18 L 61.5 ø 30	-	1 1" 3/8 Z6	Z	-	9.281.027	3 4	std
-	**1.00**	540	16.9	292	18 L 60 ø 30	18 L 60 ø 30	18 L 60 ø 30	Z	-	9.281.040	5 6	std
R	**1.46**	540	13.0	326	1 1" 3/8 Z6	-	1 1" 3/8 Z6	Z	-	9.281.877	3 4	std
R	**1.46**	540	13.0	326	-	3 L 71 ø 35	1 1" 3/8 Z6	Z	-	9.281.881	1 2	std
R	**1.46**	540	11.8	288	1 1" 3/8 Z6	1 1" 3/8 Z6	1 1" 3/8 Z6	Z	-	9.281.000	5 6	std
R	**1.46**	540	11.8	295	18 L 61.5 ø 30	18 L 61.5 ø 30	1 1" 3/8 Z6	Z	-	9.281.003	5 6	std
R	**1.84**	540	8.8	278	1 1" 3/8 Z6	-	1 1" 3/8 Z6	Z	-	9.281.020	3 4	std
R	**1.84**	540	8.8	278	1 1" 3/8 Z6	1 1" 3/8 Z6	1 1" 3/8 Z6	Z	-	9.281.008	5 6	std
R	**1.84**	540	8.8	278	18 L 61.5 ø 30	18 L 61.5 ø 30	18 L 61.5 ø 30	Z	-	9.281.011	5 6	std
R	**1.84**	540	8.8	278	18 L 61.5 ø 30	18 L 61.5 ø 30	1 1" 3/8 Z6	Z	-	9.281.029	5 6	std
R	**1.84**	540	8.8	278	1 1" 3/8 Z6	1 1" 3/8 Z6	18 L 62 ø 30	Z	-	9.281.062	5 6	std
R	**1.84**	540	8.8	278	-	18 L 62 ø 30	18 L 62 ø 30	Y	-	9.281.130	1 2	std
R	**2.16**	540	6.6	245	1 1" 3/8 Z6	1 1" 3/8 Z6	1 1" 3/8 Z6	Z	-	9.281.022	5 6	std
R	**2.91**	540	4.0	200	1 1" 3/8 Z6	1 1" 3/8 Z6	1 1" 3/8 Z6	Z	-	9.281.024	5 6	std
R	**2.91**	540	4.0	200	18 L 60 ø 30	-	18 L 60 ø 30	Z	-	9.281.016	3 4	std

T-19A

Code **259**

(0.01)

[kg] 14 | [l] 0.9

Per configurazioni non a catalogo contattare Servizio Tecnico-Commerciale
For non-catalog configurations contact Technical-Commercial Service

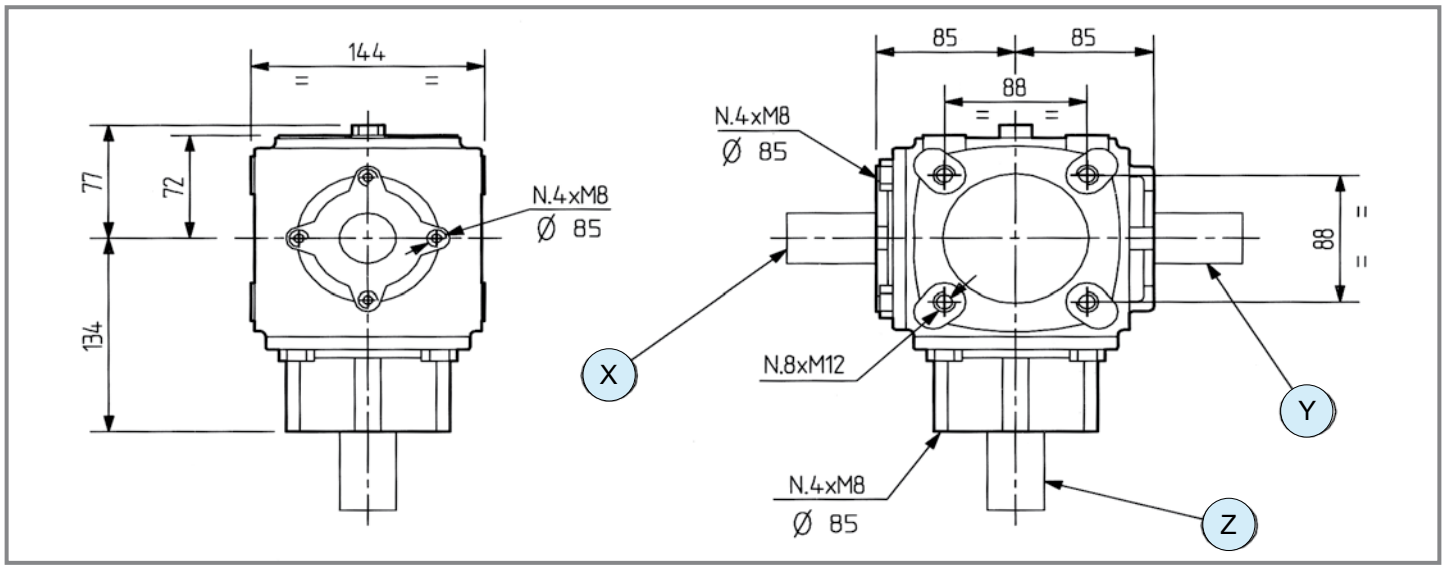

	i	N_1 [rpm]	P_1 [kW]	M_2 [Nm]	Shaft type X	Shaft type Y	Shaft type Z	Input	Features	Code	Mounting	
M	**2.91**	540	7.7	45	1 — 1" 3/8 Z6	1 — 1" 3/8 Z6	1 — 1" 3/8 Z6	X	-	9.259.070	33 34	std
	2.91	540	7.7	45	1 — 1" 3/8 Z6	-	1 — 1" 3/8 Z6	X	-	9.259.079	27 28	std
	2.91	540	7.7	45	1 — 1" 3/8 Z6	-	1 — 1" 3/8 Z6	X	-	9.259.080	25 26	std
	1.84	540	14.7	137	18 — L 60 ø 30	18 — L 60 ø 30	1 — 1" 3/8 Z6	Z	-	9.259.918	33 34	std
	1.84	540	14.7	137	1 — 1" 3/8 Z6	1 — 1" 3/8 Z6	1 — 1" 3/8 Z6	X	-	9.259.013	27 28	std
	1.84	540	14.7	137	18 — L 60 ø 30	18 — L 60 ø 30	18 — L 60 ø 30	X	-	9.259.021	25 26	std
	1.84	540	14.7	137	1 — 1" 3/8 Z6	-	1 — 1" 3/8 Z6	X	-	9.259.012	23 24	std
	1.84	540	14.7	137	1 — 1" 3/8 Z6	1 — 1" 3/8 Z6	1 — 1" 3/8 Z6	Z	-	9.259.223	11 12	std
	1.46	540	20.6	241	1 — 1" 3/8 Z6	1 — 1" 3/8 Z6	1 — 1" 3/8 Z6	X	-	9.259.000	5 6	std
	1.46	540	14.7	173	-	1 — 1" 3/8 Z6	18 — L 60 ø 30	Y	-	9.259.915	21 22	std
-	**1.00**	540	40.4	693	1 — 1" 3/8 Z6	4 shafts		-	-	9.259.243	93	std
	1.00	540	24.3	417	1 — 1" 3/8 Z6	-	1 — 1" 3/8 Z6	Z	-	9.259.005	1 2	std

comer industries

T-19A

Code **259**

(0.01)

	i	N_1 [rpm]	P_1 [kW]	M_2 [Nm]	Shaft type X	Shaft type Y	Shaft type Z	Input	Features	Code	Mounting	
-	**1.00**	540	24.3	417	1 1" 3/8 Z6	-	1 1" 3/8 Z6	Z	-	9.259.006	3 4	std
	1.00	540	24.3	417	1 1" 3/8 Z6	1 1" 3/8 Z6	1 1" 3/8 Z6	Z	-	9.259.007	5 6	std
	1.00	540	16.9	290	18 L 60 ø 30	18 L 60 ø 30	18 L 60 ø 30	Z	-	9.259.016	5 6	std
	1.00	540	16.9	290	18 L 60 ø 30	18 L 60 ø 30	1 1" 3/8 Z6	Z	-	9.259.032	5 6	std
	1,00	540	16,9	290	-	18 L 60 ø 30	18 L 60 ø 30	Y	-	9.259.014	21 22	std
	1,00	540	16,9	290	18 L 60 ø 30	-	18 L 60 ø 30	Z	-	9.259.015	5 6	std
R	**1.46**	540	16.9	423	1 1" 3/8 Z6	1 1" 3/8 Z6	1 1" 3/8 Z6	Z	-	9.259.000	5 6	std
	1.46	540	16.9	423	18 L 60 ø 30	18 L 60 ø 30	1 1" 3/8 Z6	Z	-	9.259.010	5 6	std
	1.84	540	11.0	351	18 L 60 ø 30	-	1 1" 3/8 Z6	Z	-	9.259.012	3 4	std
	1.84	540	11.0	351	1 1" 3/8 Z6	-	1 1" 3/8 Z6	Z	-	9.259.239	7 8	std
	1,84	540	11,0	347	18 L 60 ø 30	18 L 60 ø 30	1 1" 3/8 Z6	Z	-	9.259.037	5 6	std
	1,84	540	11,0	347	59 1" 3/8 Z6	59 1" 3/8 Z6	1 1" 3/8 Z6	Z	-	9.259.557	5 6	std
	1,84	540	11,0	347	80 ø30	80 ø30	1 1" 3/8 Z6	Z	-	9.259.952	5 6	std
	2,16	540	6,6	245	1 1" 3/8 Z6	1 1" 3/8 Z6	1 1" 3/8 Z6	Z	-	9.259.048	5 6	std
	2.16	540	6.6	245	1 1" 3/8 Z6	-	1 1" 3/8 Z6	Z	-	9.259.263	1 2	std
	2.91	540	3.7	185	1 1" 3/8 Z6	1 1" 3/8 Z6	1 1" 3/8 Z6	Z	-	9.259.070	5 6	std
	2.91	540	3.7	185	1 1" 3/8 Z6	-	1 1" 3/8 Z6	Z	-	9.259.079	1 2	std
	2.91	540	3.7	185	1 1" 3/8 Z6	-	1 1" 3/8 Z6	Z	-	9.259.080	3 4	std

T-27J

Code **267.8**

T-27A

Code **267**

(0.01)

[kg] 21 | [l] 1.2

Per configurazioni non a catalogo contattare Servizio Tecnico-Commerciale
For non-catalog configurations contact Technical-Commercial Service

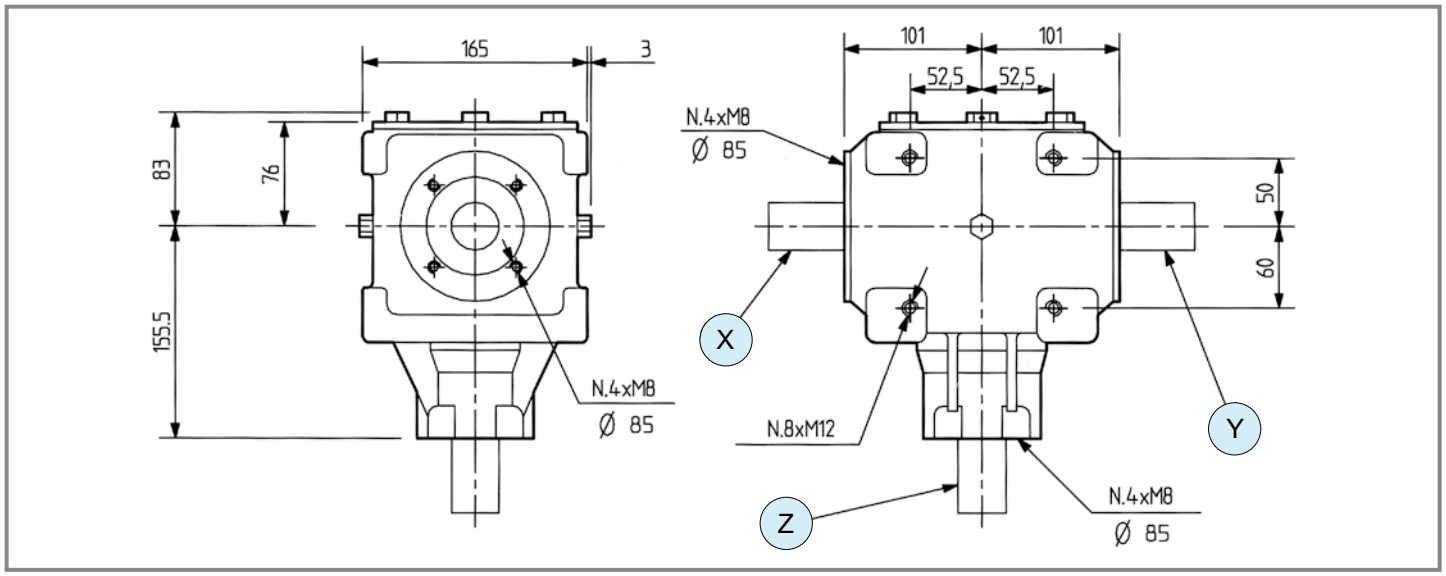

	i	N_1 [rpm]	P_1 [kW]	M_2 [Nm]	Shaft type X	Shaft type Y	Shaft type Z	Input	Features	Code	Mounting	
	1.92	540	22.1	197	1 1" 3/8 Z6	1 1" 3/8 Z6	1 1" 3/8 Z6	Z	-	9.267.245	33 34	std
	1.92	540	22.1	197	1 1" 3/8 Z6	1 1" 3/8 Z6	1 1" 3/8 Z6	X	-	9.267.007	25 26	std
	1.92	540	22.1	197	-	1 1" 3/8 Z6	1 1" 3/8 Z6	X	-	9.267.021	21 22	std
	1.92	540	22.1	197	-	1 1" 3/8 Z6	1 1" 3/8 Z6	Z	-	9.267.022	23 24	std
	1.92	540	22.1	197	3 L 68 ø 35	3 L 68 ø 35	1 1" 3/8 Z6	Z	-	9.267.034	33 34	std
	1.92	540	22.1	197	1 1" 3/8 Z6	1 1" 3/8 Z6	1 1" 3/8 Z6	Z	-	9.267.023	33 34	std
M	**1.92**	540	22.1	197	1 1" 3/8 Z6	-	1 1" 3/8 Z6	Z	-	9.267.235	31 32	std
	1.46	540	38.3	450	1 1" 3/8 Z6	1 1" 3/8 Z6	1 1" 3/8 Z6	Z	-	9.267.042	33 34	std
	1.46	540	38.3	450	1 1" 3/8 Z6	-	1 1" 3/8 Z6	Z	-	9.267.059	29 30	std
	1.46	540	27.2	320	1 1" 3/8 Z6	-	1 1" 3/8 Z6	Z	-	9.267.028	31 32	std
	1.35	540	39.0	495	1 1" 3/8 Z6	1 1" 3/8 Z6	1 1" 3/8 Z6	Z	-	9.267.234	33 34	std
	1.35	540	36.7	466	1 1" 3/8 Z6	-	1 1" 3/8 Z6	Z	-	9.267.048	31 32	std

comer industries

T-27J
Code **267.8**

T-27A
Code **267**

(0.01)

	i	N_1 [rpm]	P_1 [kW]	M_2 [Nm]	Shaft type X	Shaft type Y	Shaft type Z	Input	Features	Code	Mounting	
					1 - Ruota libera / *Free wheel*							
M	**1.35**	540	36.7	466	1 1" 3/8 Z6	-	1 1" 3/8 Z6	Z	-	9.267.845	29 30	std
-	**1.00**	540	40.5	695	-	1 1" 3/8 Z6	1 1" 3/8 Z6	Z	-	9.267.043	3 4	std
	1.00	540	40.5	695	-	1 1" 3/8 Z6	1 1" 3/8 Z6	Z	-	9.267.041	21 22	std
	1.00	540	40.5	695	4 L 117 ø 40	1 1" 3/8 Z6	50 ASA 16/32 Z19	Y	-	9.267.801	11 12	std
	1.00	540	40.5	695	7 36x40 DIN5482	-	1 1" 3/8 Z6	Z	1 ccw	9.267.601	21 22	std
	1.00	540	40.5	695	1 1" 3/8 Z6	1 1" 3/8 Z6	1 1" 3/8 Z6	Z	-	9.267.806	5 6	std
	1.00	540	40.5	695	3 L 68 ø 35	-	3 L 50 ø 35	Z	-	9.267.105	1 2	std
	1.00	540	27.9	479	3 L 68 ø 35	3 L 68 ø 35	1 1" 3/8 Z6	Z	-	9.267.013	5 6	std
	1.00	540	88.2	1513	1 1" 3/8 Z6	4 shafts			-	9.267.803	93	std
R	**1.35**	540	25.7	595	1 1" 3/8 Z6	-	1 1" 3/8 Z6	Z	-	9.267.856	1 2	std
	1.46	540	24.3	608	1 1" 3/8 Z6	1 1" 3/8 Z6	1 1" 3/8 Z6	Z	-	9.267.017	5 6	std
	1.92	540	15.1	497	1 1" 3/8 Z6	1 1" 3/8 Z6	1 1" 3/8 Z6	X	-	9.267.023	11 12	std
	1.92	540	15.1	497	-	1 1" 3/8 Z6	1 1" 3/8 Z6	Z	-	9.267.022	3 4	std
	1.92	540	15.1	497	1 1" 3/8 Z6	1 1" 3/8 Z6	1 1" 3/8 Z6	Z	-	9.267.007	5 6	std
	1.92	540	15.1	497	1 1" 3/8 Z6	-	1 1" 3/8 Z6	Z	-	9.267.021	1 2	std

T-28J

Code **268.8**

(0.01)

[kg] [l]

Per configurazioni non a catalogo contattare Servizio Tecnico-Commerciale
For non-catalog configurations contact Technical-Commercial Service

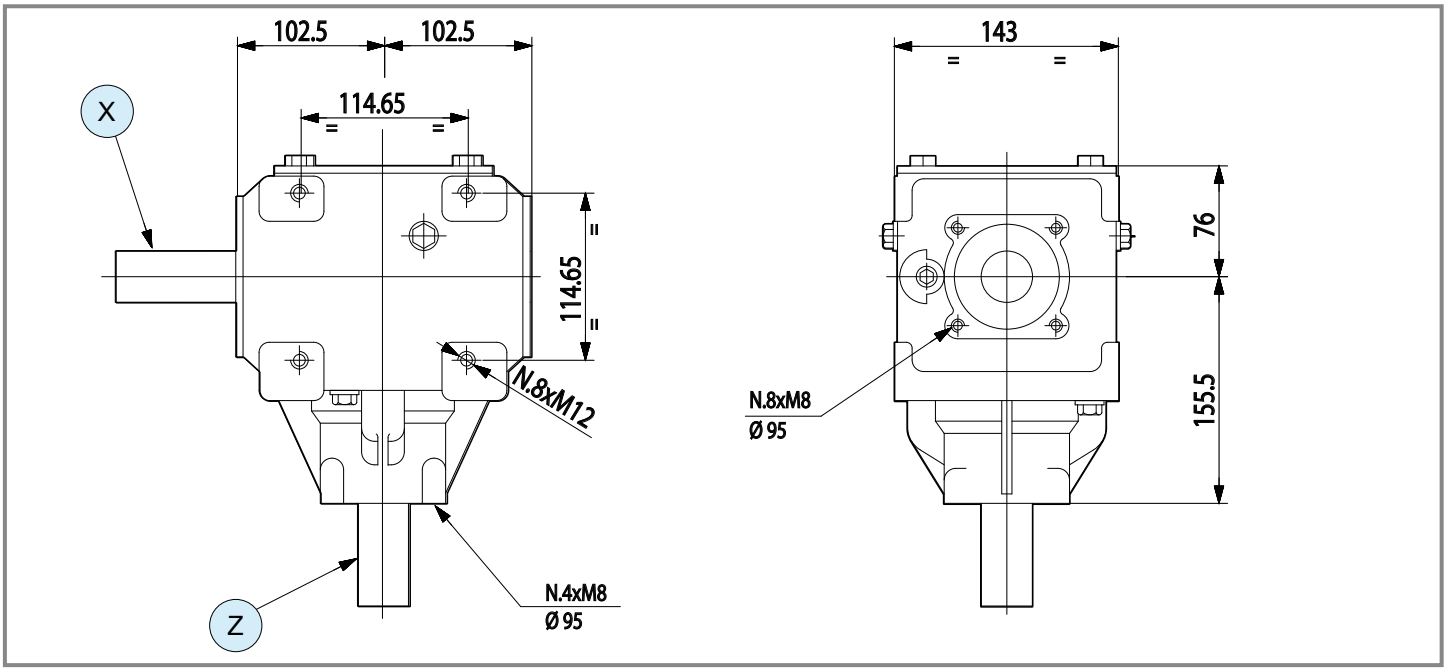

	i	N_1 [rpm]	P_1 [kW]	M_2 [Nm]	Shaft type X	Shaft type Y	Shaft type Z	Input	Features	Code	Mounting	
M	**1.35**	540	40.4	513	1 1" 3/8 Z6	-	1 1" 3/8 Z6	X	Nr. 8 holes M8	9.268.875	15	std
	1.35	540	40.4	513	1 1" 3/8 Z6	-	1 1" 3/8 Z6	X	Nr. 8 holes 1/2" 13 UNC	9.268.802	15	std

Questa pagina è lasciata intenzionalmente bianca
This page is intentionally left blank

T-310J | T-310A

Code **310.8** | Code **310**

(0.01)

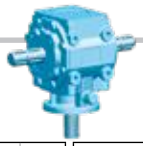

[kg]	18	[l]	0.8

Per configurazioni non a catalogo contattare Servizio Tecnico-Commerciale
For non-catalog configurations contact Technical-Commercial Service

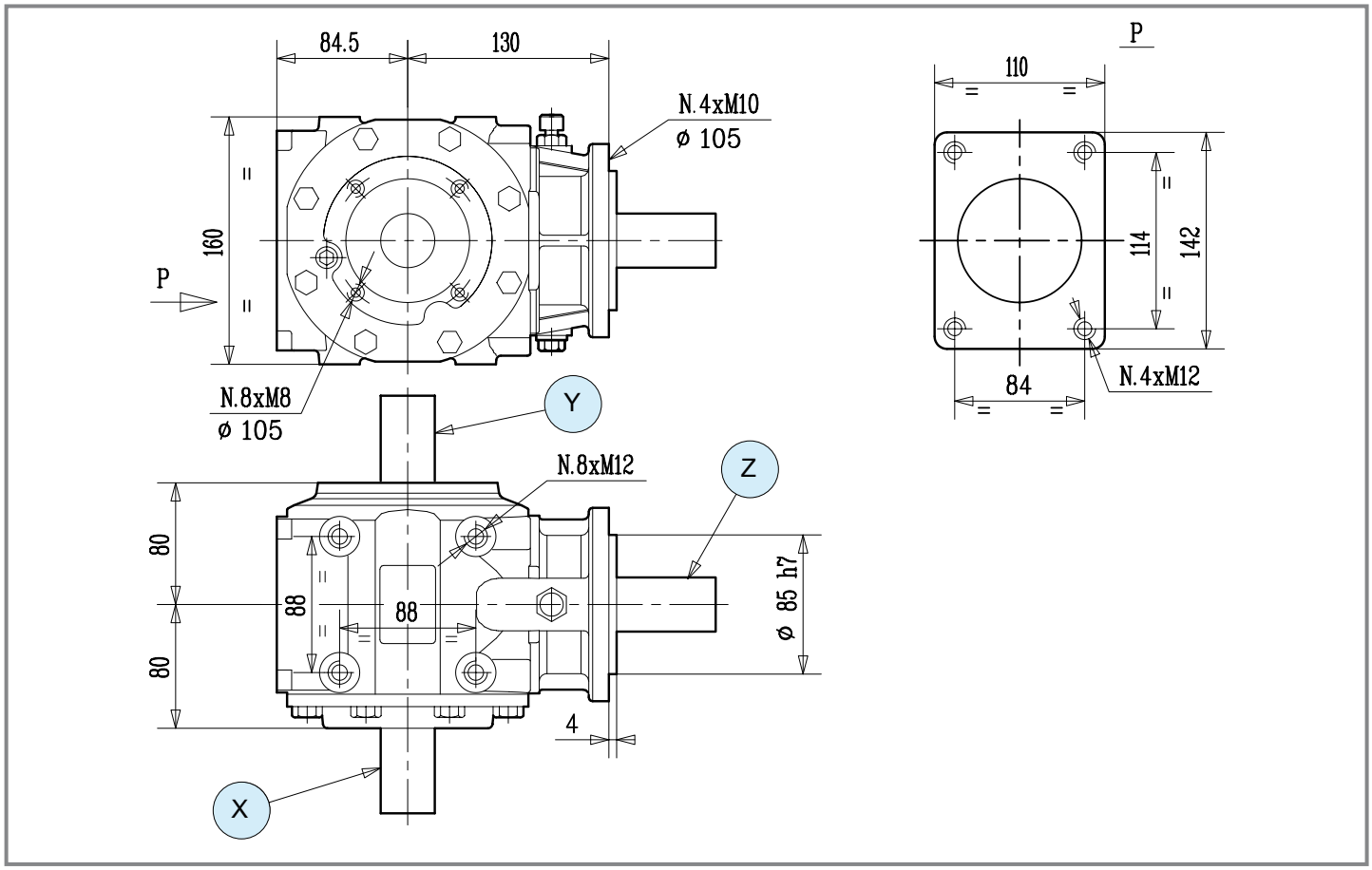

1 - Ruota libera / *Free wheel* 2 - Doppia ruota libera / *Double free wheel*

	i	N_1 [rpm]	P_1 [kW]	M_2 [Nm]	Shaft type X	Shaft type Y	Shaft type Z	Input	Features	Code	Mounting	
M	**3.00**	540	22.1	126	1 – 1" 3/8 Z6	-	1 – 1" 3/8 Z6	X	1 ccw	9.310.748	21 22	std
	3.00	540	22.1	126	1 – 1" 3/8 Z6	-	14 – L 64 – ø 33	X	1 ccw	9.310.752	21 22	std
	3.00	540	22.1	126	-	1 – 1" 3/8 Z6	14 – L 64 – ø 33	Y	1 ccw	9.310.754	23 24	std
	3.00	540	22.1	126	1 – 1" 3/8 Z6	1 – 1" 3/8 Z6	14 – L 64 – ø 33	X	2 ccw	9.310.773	36	std
	3.00	540	22.1	126	1 – 1" 3/8 Z6	1 – 1" 3/8 Z6	14 – L 64 – ø 33	X	1 ccw	9.310.870	25 26	std
	3.00	540	22.1	126	1 – 1" 3/8 Z6	-	14 – L 64 – ø 33	X	1 ccw	9.310.875	21 22	std
	3.00	540	22.1	126	1 – 1" 3/8 Z6	-	14 – L 64 – ø 33	X	1 ccw	9.310.876	23 24	std
	3.00	540	22.1	126	1 – 1" 3/8 Z6	-	14 – L 64 – ø 33	X	-	9.310.702	21 22	std

comer industries

T-310J

Code **310.8**

T-310A

Code **310**

(0.01)

1 - Ruota libera / *Free wheel* 2 - Doppia ruota libera / *Double free wheel*

	i	N_1 [rpm]	P_1 [kW]	M_2 [Nm]	Shaft type X	Shaft type Y	Shaft type Z	Input	Features	Code	Mounting	
M	**3.00**	540	22.1	126	1 1" 3/8 Z6	1 1" 3/8 Z6	14 L 64 ø 33	X	-	9.310.703	27 28	std
	3.00	540	22.1	126	-	1 1" 3/8 Z6	14 L 64 ø 33	Y	-	9.310.707	23 24	std
	2.50	540	25.7	176	1 1" 3/8 Z6	-	14 L 64 ø 33	X	-	9.310.700	21 22	std
	2.50	540	25.7	176	1 1" 3/8 Z6	1 1" 3/8 Z6	14 L 64 ø 33	X	-	9.310.738	27 28	std
	1.93	540	29.4	261	1 1" 3/8 Z6	-	14 L 64 ø 33	X	-	9.310.701	21 22	std
	1.93	540	29.4	261	-	1 1" 3/8 Z6	14 L 64 ø 33	Y	-	9.310.735	23 24	std
	1.66	540	31.6	326	1 1" 3/8 Z6	1 1" 3/8 Z6	14 L 64 ø 33	X	1 CCW	9.310.782	27 28	std
	1.66	1000	43.4	242	1 1" 3/8 Z6	1 1" 3/8 Z6	14 L 64 ø 33	Y	2 CCW	9.310.770	36	std
	1.60	540	31.5	337	1 1" 3/8 Z6	1 1" 3/8 Z6	14 L 64 ø 33	Y	-	9.310.740	25 26	std

T-304A

Code **304**

(0.01)

[kg]	19	[l]	1.1

Per configurazioni non a catalogo contattare Servizio Tecnico-Commerciale
For non-catalog configurations contact Technical-Commercial Service

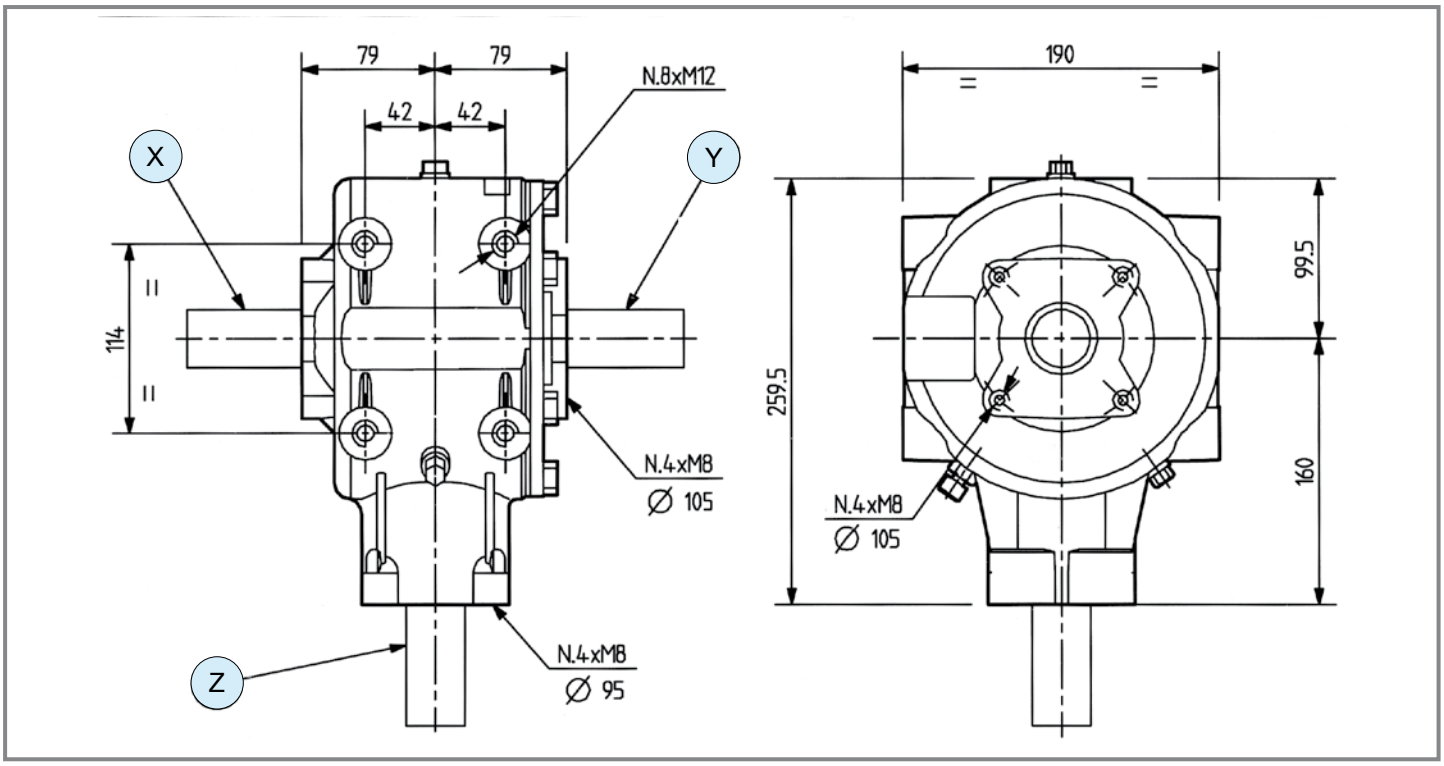

3 - Dentatura elicoidale / *Helical Teeth*

	i	N_1 [rpm]	P_1 [kW]	M_2 [Nm]	Shaft type X	Shaft type Y	Shaft type Z	Input	Features	Code	Mounting	
	4.50	540	28.0	107	1 — 1" 3/8 Z6	1 — 1" 3/8 Z6	1 — 1" 3/8 Z6	X	3	9.304.019	27 28	std
	4.50	540	28.0	107	1 — 1" 3/8 Z6	-	1 — 1" 3/8 Z6	X	-	9.304.024	21 22	std
	3.00	1000	50.7	157	1 — 1" 3/8 Z6	4 — L 80 ø 40	2 — 1"3/8 Z21	X	-	9.304.398	25 26	std
	3.00	540	36.9	211	1 — 1" 3/8 Z6	-	2 — 1"3/8 Z21	X	-	9.304.775	21 22	std
	3.00	540	36.9	211	1 — 1" 3/8 Z6	1 — 1" 3/8 Z6	1 — 1" 3/8 Z6	X	-	9.304.000	27 28	std
M	**3.00**	540	36.9	211	1 — 1" 3/8 Z6	-	1 — 1" 3/8 Z6	X	-	9.304.010	21 22	std
	3.00	540	36.9	211	1 — 1" 3/8 Z6	-	1 — 1" 3/8 Z6	X	-	9.304.013	23 24	std
	1.93	540	40.4	359	1 — 1" 3/8 Z6	1 — 1" 3/8 Z6	1 — 1" 3/8 Z6	X	-	9.304.006	27 28	std
	1.93	540	40.4	359	1 — 1" 3/8 Z6	-	1 — 1" 3/8 Z6	X	-	9.304.014	21 22	std
	1.93	540	40.4	359	1 — 1" 3/8 Z6	-	1 — 1" 3/8 Z6	X	-	9.304.236	23 24	std

comer industries

T-304A

Code **304**

(0.01)

	i	N_1 [rpm]	P_1 [kW]	M_2 [Nm]	Shaft type X	Shaft type Y	Shaft type Z	Input	Features	Code	Mounting	
					3 - Dentatura elicoidale / *Helical Teeth*							
	1.93	540	27.9	924	1 1" 3/8 Z6	1 1" 3/8 Z6	1 1" 3/8 Z6	Z	-	9.304.006	5 6	std
	1.93	540	27.9	924	1 1" 3/8 Z6	-	1 1" 3/8 Z6	Z	-	9.304.015	3 4	std
	1.93	540	27.9	924	1 1" 3/8 Z6	-	1 1" 3/8 Z6	Z	-	9.304.014	1 2	std
	3.00	540	18.4	947	1 1" 3/8 Z6	1 1" 3/8 Z6	1 1" 3/8 Z6	Z	-	9.304.000	5 6	std
R	**3.00**	540	18.4	947	1 1" 3/8 Z6	-	1 1" 3/8 Z6	Z	-	9.304.010	1 2	std
	3.00	540	18.4	947	1 1" 3/8 Z6	-	1 1" 3/8 Z6	Z	-	9.304.013	3 4	std
	4.50	540	11.0	849	1 1" 3/8 Z6	-	1 1" 3/8 Z6	Z	3	9.304.018	3 4	std
	4.50	540	11.0	849	1 1" 3/8 Z6	1 1" 3/8 Z6	1 1" 3/8 Z6	Z	3	9.304.019	5 6	std
	5.33	540	9.9	906	1 1" 3/8 Z6	1 1" 3/8 Z6	1 1" 3/8 Z6	Z	3	9.304.025	5 6	std

T-278A

Code **278**

(0.01)

[kg]	37	[l]	2.5

Per configurazioni non a catalogo contattare Servizio Tecnico-Commerciale
For non-catalog configurations contact Technical-Commercial Service

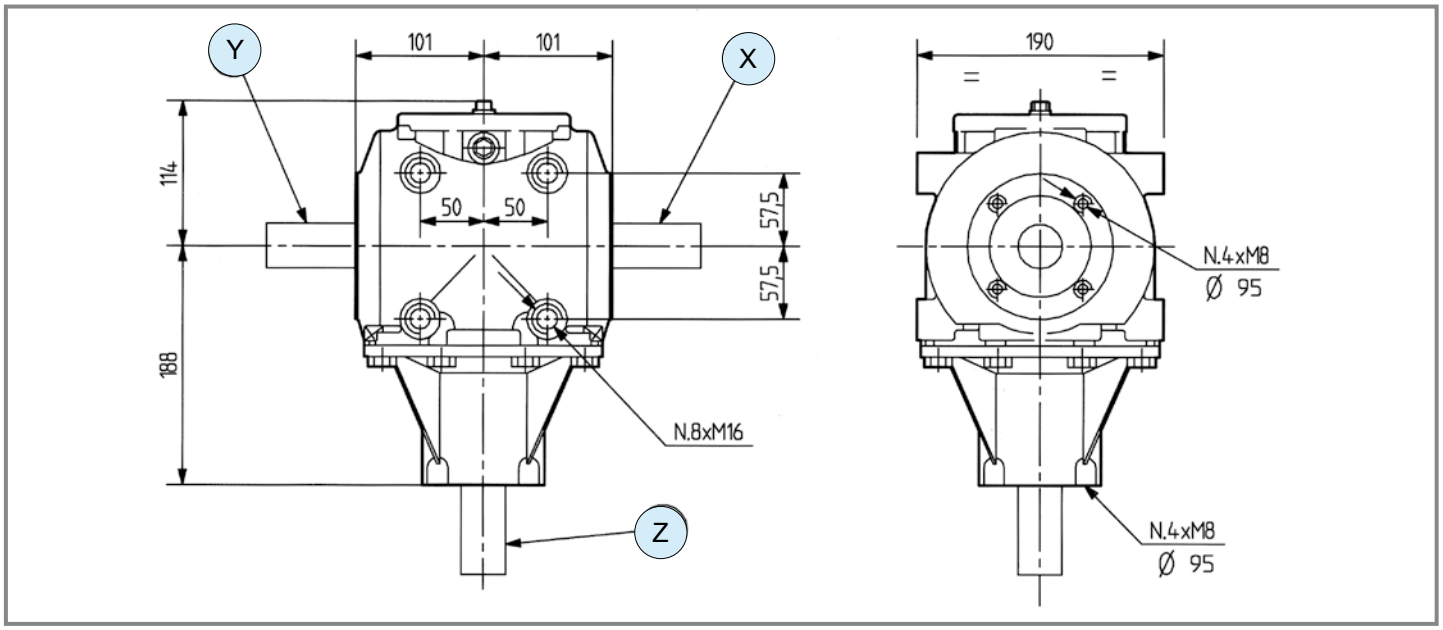

5 - Rinforzato / *Reinforzed*

	i	N_1 [rpm]	P_1 [kW]	M_2 [Nm]	Shaft type X	Shaft type Y	Shaft type Z	Input	Features	Code	Mounting	
M	**2.91**	540	33.1	195	1 1" 3/8 Z6	-	1 1" 3/8 Z6	X	-	9.278.013	23 24	std
	2.91	540	33.1	195	1 1" 3/8 Z6	1 1" 3/8 Z6	1 1" 3/8 Z6	Y	-	9.278.014	25 26	std
	2.33	540	38.3	282	-	1 1" 3/8 Z6	1 1" 3/8 Z6	Y	-	9.278.010	23 24	std
	2.33	540	38.3	282	1 1" 3/8 Z6	1 1" 3/8 Z6	1 1" 3/8 Z6	X	-	9.278.011	25 26	std
	1.92	540	40.5	362	1 1" 3/8 Z6	-	1 1" 3/8 Z6	X	-	9.278.006	21 22	std
	1.92	540	40.5	362	1 1" 3/8 Z6	1 1" 3/8 Z6	1 1" 3/8 Z6	X	-	9.278.008	25 26	std
	1.92	540	40.5	362	1 1" 3/8 Z6	-	1 1" 3/8 Z6	X	-	9.278.007	23 24	std
	1.35	540	40.5	949	1 1" 3/8 Z6	1 1" 3/8 Z6	1 1" 3/8 Z6	Z	-	9.278.097	33 34	std
-	**1.00**	540	40.5	695	1 1" 3/8 Z6	-	1 1" 3/8 Z6	Z	-	9.278.000	1 2	std
	1.00	540	40.5	695	1 1" 3/8 Z6	-	1 1" 3/8 Z6	Z	-	9.278.001	3 4	std
	1.00	540	40.5	695	1 1" 3/8 Z6	1 1" 3/8 Z6	1 1" 3/8 Z6	Z	-	9.278.002	5 6	std

T-278A

Code **278**

(0.01)

	i	N_1 [rpm]	P_1 [kW]	M_2 [Nm]	Shaft type X	Shaft type Y	Shaft type Z	Input	Features	Code	Mounting	
-	**1.00**	540	54.0	926	1 1" 3/8 Z6	1 1" 3/8 Z6	1 1" 3/8 Z6	Z	5	9.278.095	5 6	std
-	**1.00**	540	58.8	1008	1 1" 3/8 Z6	4 shafts		X	-	9.278.222	93	std
-	**1.00**	1000	73.5	681	1 1" 3/8 Z6	1 1" 3/8 Z6	1 1" 3/8 Z6	Z	-	9.278.741	5 6	std
R	**1.35**	540	44.1	1021	1 1" 3/8 Z6	4 shafts		X	-	9.278.290	93	std
R	**1,35**	540	40,5	938	1 1" 3/8 Z6	1 1" 3/8 Z6	1 1" 3/8 Z6	Z	-	9.278.097	5 6	std
R	**1,35**	540	40,5	938	1 1" 3/8 Z6	1 1" 3/8 Z6	1 1" 3/8 Z6	Z	-	9.278.707	1 2	std
R	**1.46**	540	40.5	1014	1 1" 3/8 Z6	1 1" 3/8 Z6	1 1" 3/8 Z6	Z	-	9.278.262	5 6	std
R	**1.60**	540	36.8	1010	1 1" 3/8 Z6	1 1" 3/8 Z6	1 1" 3/8 Z6	Z	-	9.278.005	5 6	std
R	**1.92**	540	33.1	1090	1 1" 3/8 Z6	-	1 1" 3/8 Z6	Z	-	9.278.006	1 2	std
R	**1.92**	540	33.1	1090	1 1" 3/8 Z6	1 1" 3/8 Z6	1 1" 3/8 Z6	Z	-	9.278.008	5 6	std
R	**1.92**	540	33.1	1090	1 1" 3/8 Z6	-	1 1" 3/8 Z6	Z	-	9.278.007	3 4	std
R	**1.92**	540	33.1	1090	1 1" 3/8 Z6	4 shafts		Z	-	9.278.221	93	std
R	**2.33**	540	25.0	999	-	1 1" 3/8 Z6	1 1" 3/8 Z6	Z	-	9.278.224	3 4	std
R	**2.33**	540	25.0	999	-	1 1" 3/8 Z6	1 1" 3/8 Z6	Z	-	9.278.010	3 4	std
R	**2.91**	540	21.3	1063	1 1" 3/8 Z6	-	1 1" 3/8 Z6	Z	-	9.278.012	1 2	std

T-311J | T-311A

Code **311.8** | Code **311**

(0.01)

[kg] 23.5 | [l] 1.2

Per configurazioni non a catalogo contattare Servizio Tecnico-Commerciale
For non-catalog configurations contact Technical-Commercial Service

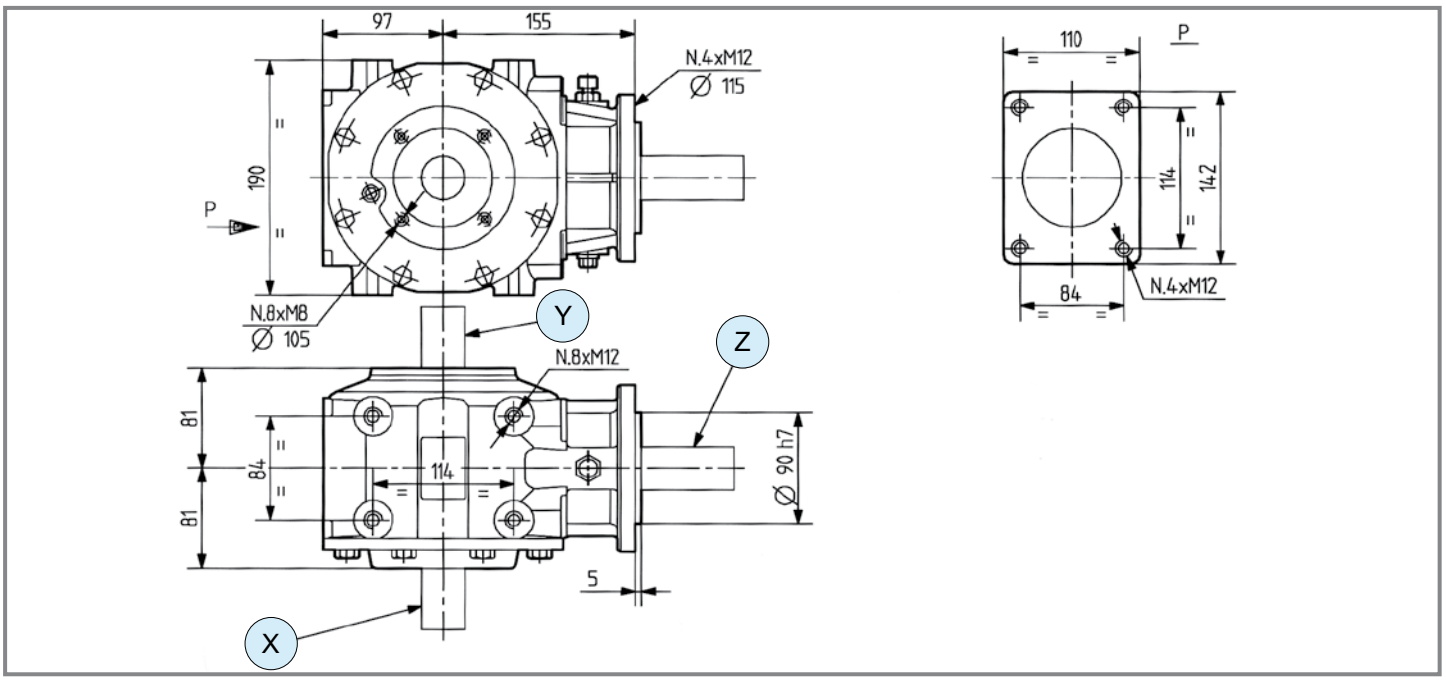

1 - Ruota libera / *Free wheel*

	i	N_1 [rpm]	P_1 [kW]	M_2 [Nm]	Shaft type X	Shaft type Y	Shaft type Z	Input	Features	Code	Mounting	
M	**3.00**	1000	44.1	136	-	2 1"3/8 Z21	2 1"3/8 Z21	Y	-	9.311.675	23 24	std
	3.00	540	36.8	210	1 1" 3/8 Z6	-	14 L 77 ø 33	X	-	9.311.734	23 24	std
	3.00	540	36.8	210	1 1" 3/8 Z6	1 1" 3/8 Z6	14 L 77 ø 33	X	-	9.311.704	27 28	std
	3.00	540	36.8	210	1 1" 3/8 Z6	-	1 1" 3/8 Z6	X	1 ccw	9.311.670	21 22	std
	3.00	540	36.8	210	1 1" 3/8 Z6	-	14 L 77 ø 33	X	-	9.311.724	21 22	std
	3.00	540	36.8	210	1 1" 3/8 Z6	-	1 1" 3/8 Z6	X	-	9.311.731	21 22	std
	3.00	540	36.8	210	1 1" 3/8 Z6	1 1" 3/8 Z6	1 1" 3/8 Z6	X	-	9.311.747	27 28	std
	3.00	540	36.8	210	1 1" 3/8 Z6	-	14 L 77 ø 33	X	1 ccw	9.311.874	21 22	std
	3.00	540	36.8	210	1 1" 3/8 Z6	1 1" 3/8 Z6	14 L 77 ø 33	X	1 ccw	9.311.875	27 28	std
	3.00	540	36.8	210	1 1" 3/8 Z6	-	14 L 77 ø 33	X	1 ccw	9.311.614	21 22	std

comer industries

T-311J | T-311A

Code **311.8** | Code **311**

(0.01)

1 - Ruota libera / *Free wheel*

	i	N_1 [rpm]	P_1 [kW]	M_2 [Nm]	Shaft type X	Shaft type Y	Shaft type Z	Input	Features	Code	Mounting	
M	**3.00**	540	36.8	210	1 1" 3/8 Z6	1 1" 3/8 Z6	14 L 77 ø 33	X	1 ccw	9.311.615	27 28	std
	3.00	540	36.8	210	1 1" 3/8 Z6	-	14 L 77 ø 33	X	1 ccw	9.311.622	23 24	std
	3.00	540	36.8	210	-	1 1" 3/8 Z6	14 L 77 ø 33	Y	1 ccw	9.311.885	23 24	std
	2.54	540	47.8	323	1 1" 3/8 Z6	-	1 1" 3/8 Z6	X	-	9.311.693	23 24	std
	2.50	540	38.2	262	1 1" 3/8 Z6	-	14 L 77 ø 33	X	-	9.311.702	21 22	std
	1.93	540	44.4	395	1 1" 3/8 Z6	-	1 1" 3/8 Z6	X	1 ccw	9.311.632	21 22	std
	1.93	540	44.4	395	1 1" 3/8 Z6	-	14 L 77 ø 33	X	-	9.311.730	21 22	std
	1.93	540	44.4	395	1 1" 3/8 Z6	-	14 L 77 ø 33	X	-	9.311.729	23 24	std
	1.93	540	44.4	395	1 1" 3/8 Z6	1 1" 3/8 Z6	14 L 77 ø 33	X	-	9.311.703	27 28	std
	1.93	540	44.5	395	-	2 1"3/8 Z21	2 1"3/8 Z21	Y	-	9.311.657	23 24	std
	1.60	540	41.9	449	1 1" 3/8 Z6	1 1" 3/8 Z6	14 L 77 ø 33	X	-	9.311.741	27 28	std
	1.60	540	41.9	449	1 1" 3/8 Z6	1 1" 3/8 Z6	1 1" 3/8 Z6	X	1 ccw	9.311.623	27 28	std

T-312A | T-313J | T-312ALL

Code **312** | Code **313.8** | Code **312**

(0.01)

[kg] 27 | [l] 1.5

Per configurazioni non a catalogo contattare Servizio Tecnico-Commerciale
For non-catalog configurations contact Technical-Commercial Service

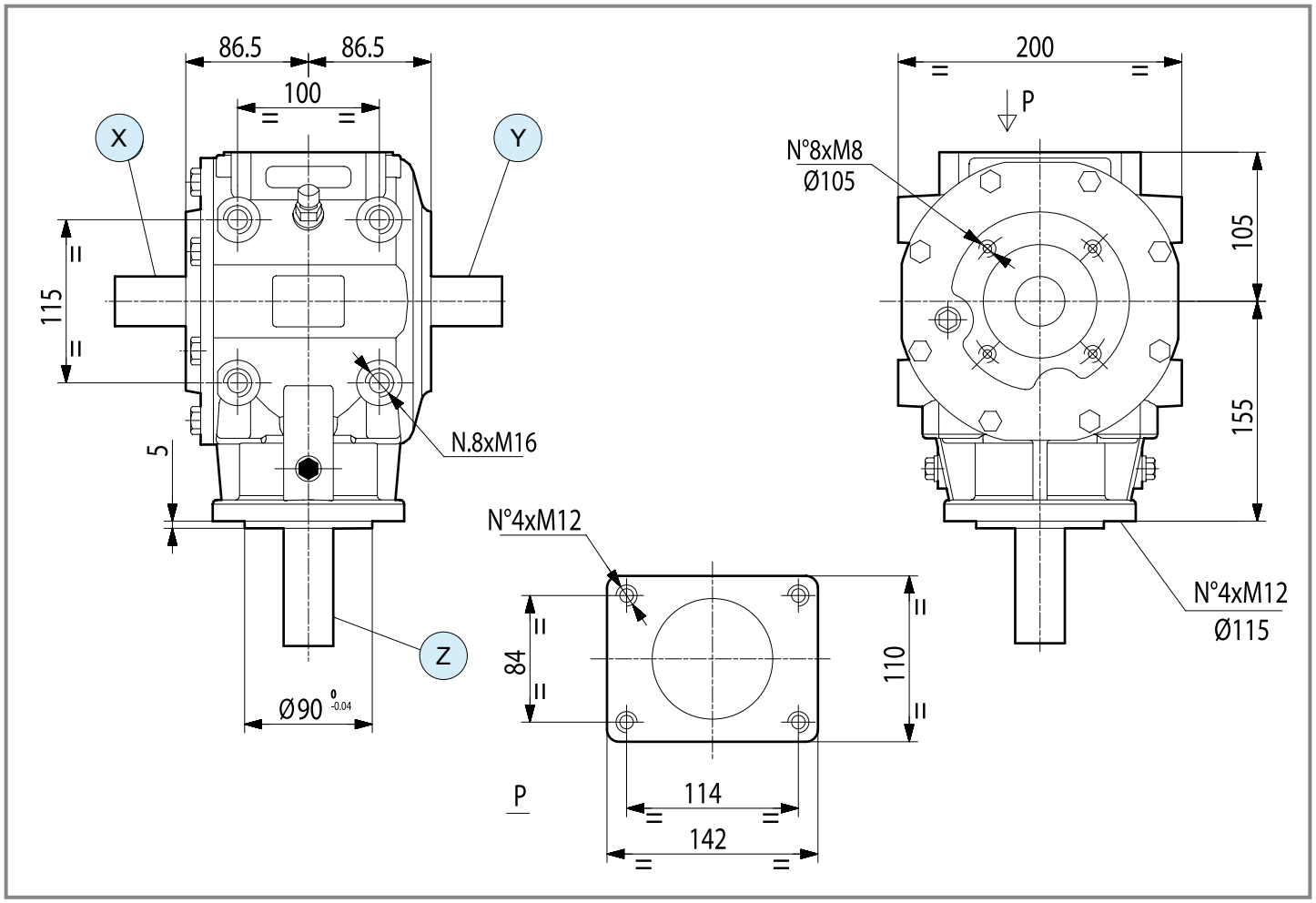

T312A/ALL disponibili su richiesta versioni in alluminio
T312A/ALL aluminium versions available on demand

	i	N_1 [rpm]	P_1 [kW]	M_2 [Nm]	1 - Ruota libera / *Free wheel* Shaft type X	Y	Z	Input	Features	Code	Mounting	
	3.00	1000	62.5	193	1 — 1" 3/8 Z6	3 — L 80 ø 35	1 — 1" 3/8 Z6	X	-	9.312.667	25 26	std
	3.00	540	45.6	261	1 — 1" 3/8 Z6	1 — 1" 3/8 Z6	4 — L 85.5 ø 40	Z	1 cw	9.312.699	27 28	std
	3.00	540	45.6	261	1 — 1" 3/8 Z6	1 — 1" 3/8 Z6	14 — L 77 ø 33	Y	1 ccw	9.313.870	27 28	std
M	**3.00**	540	45.6	261	1 — 1" 3/8 Z6	-	14 — L 77 ø 33	X	1 ccw	9.313.875	21 22	std
	3.00	540	45.6	261	-	1 — 1" 3/8 Z6	1 — 1" 3/8 Z6	Y	1 ccw	9.313.876	27 28	std
	3.00	540	45.6	261	1 — 1" 3/8 Z6	-	14 — L 77 ø 33	X	-	9.312.702	21 22	std
	3.00	540	45.6	261	1 — 1" 3/8 Z6	1 — 1" 3/8 Z6	14 — L 77 ø 33	X	-	9.312.730	27 28	std

comer industries

T-312A | T-313J | T-312ALL

Code **312** | Code **313.8** | Code **312**

(0.01)

1 - Ruota libera / *Free wheel*

	i	N_1 [rpm]	P_1 [kW]	M_2 [Nm]	Shaft type X	Shaft type Y	Shaft type Z	Input	Features	Code	Mounting	
	3.00	540	45.6	261	1 — 1" 3/8 Z6	-	14 — L 77 — ø 33	X	-	9.312.726	23 / 24	std
	3.00	540	45.6	261	1 — 1" 3/8 Z6	-	1 — 1" 3/8 Z6	X	1 ccw	9.312.737	21 / 22	std
	3.00	540	45.6	261	1 — 1" 3/8 Z6	-	4 — L 85.5 — ø 40	X	1 ccw	9.312.763	23 / 24	std
	3.00	540	45.6	261	1 — 1" 3/8 Z6	-	14 — L 77 — ø 33	X	1 ccw	9.312.756	21 / 22	std
	3.00	540	45.6	261	1 — 1" 3/8 Z6	-	14 — L 77 — ø 33	X	1 ccw	9.312.661	23 / 24	std
	2.50	540	45.6	313	1 — 1" 3/8 Z6	-	14 — L 77 — ø 33	X	1 ccw	9.312.776	21 / 22	std
	2.50	540	50.0	343	1 — 1" 3/8 Z6	-	14 — L 77 — ø 33	X	-	9.312.701	21 / 22	std
	2.50	540	50.0	343	1 — 1" 3/8 Z6	1 — 1" 3/8 Z6	14 — L 77 — ø 33	X	-	9.312.717	27 / 28	std
M	**1.93**	540	53.7	477	1 — 1" 3/8 Z6	1 — 1" 3/8 Z6	23 — L 230 — ø 50	Y	special output shaft	9.313.877	27 / 28	std
	1.93	540	57.3	509	1 — 1" 3/8 Z6	-	14 — L 77 — ø 33	X	1 ccw	9.312.768	21 / 22	std
	1.93	540	53.7	477	-	1 — 1" 3/8 Z6	1 — 1" 3/8 Z6	Y	1 ccw	9.312.261	23 / 24	std
	1.93	540	53.7	477	1 — 1" 3/8 Z6	-	14 — L 77 — ø 33	X	-	9.312.700	21 / 22	std
	1.93	540	53.7	477	1 — 1" 3/8 Z6	1 — 1" 3/8 Z6	14 — L 77 — ø 33	X	-	9.312.703	27 / 28	std
	1.93	540	53.7	477	1 — 1" 3/8 Z6	1 — 1" 3/8 Z6	1 — 1" 3/8 Z6	X	-	9.312.615	27 / 28	std
	1.60	1000	76.5	709	1 — 1" 3/8 Z6	1 — 1" 3/8 Z6	1 — 1" 3/8 Z6	X	-	9.313.880	27 / 28	std
	1.60	1000	76.5	443	1 — 1" 3/8 Z6	-	14 — L 77 — ø 33	X	-	9.312.712	21 / 22	std
	1.60	1000	76.5	443	1 — 1" 3/8 Z6	-	14 — L 77 — ø 33	X	-	9.312.720	23 / 24	std
	1.60	1000	76.5	443	1 — 1" 3/8 Z6	1 — 1" 3/8 Z6	14 — L 77 — ø 33	X	1 ccw	9.312.755	27 / 28	std

T-312HD

Code **312**

(0.01)

[kg]	27	[l]	1.5

Per configurazioni non a catalogo contattare Servizio Tecnico-Commerciale
For non-catalog configurations contact Technical-Commercial Service

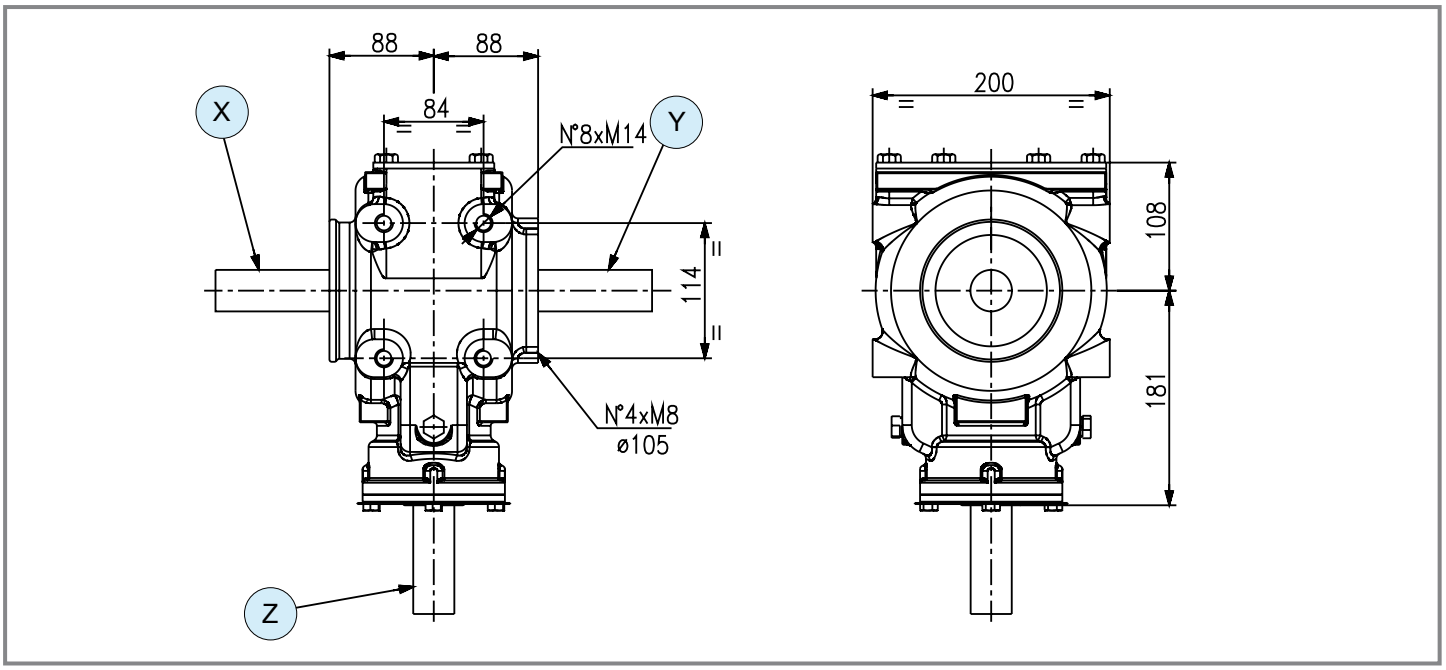

	i	N_1 [rpm]	P_1 [kW]	M_2 [Nm]	5 - Rinforzato / *Renforced* Shaft type X	Y	Z	Input	Features	Code	Mounting	
M	**3.91**	1000	50.0	118	2 1"3/8 Z21	-	2 1"3/8 Z21	X	5	-	21 22	std
	3.17	1000	50.0	146	2 1"3/8 Z21	-	2 1"3/8 Z21	X	5	-	21 22	std

comer industries

Questa pagina è lasciata intenzionalmente bianca
This page is intentionally left blank

T-290A

Code **290**

(0.01)

[kg] 31 | [l] 2.3

Per configurazioni non a catalogo contattare Servizio Tecnico-Commerciale
For non-catalog configurations contact Technical-Commercial Service

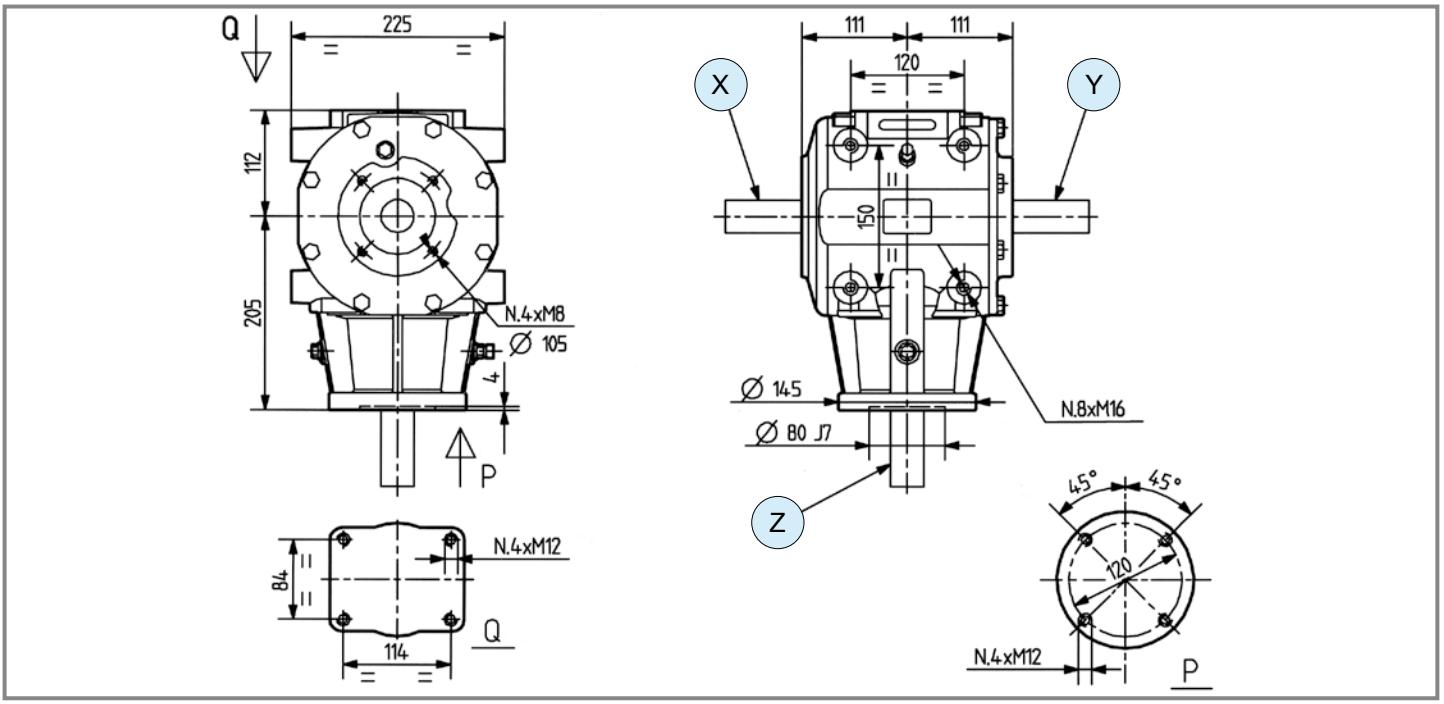

1 - Ruota libera / *Free wheel*

	i	N_1 [rpm]	P_1 [kW]	M_2 [Nm]	Shaft type X	Shaft type Y	Shaft type Z	Input	Features	Code	Mounting	
	3.00	540	58.8	336	[5] 1" 3/4 Z6	[5] 1" 3/4 Z6	[5] 1" 3/4 Z6	X	1 ccw	9.290.622	27 28	std
	3.00	1000	57.3	330	[1] 1" 3/8 Z6	[1] 1" 3/8 Z6	[1] 1" 3/8 Z6	Y	1 ccw	9.290.717	27 28	std
	3.00	540	57.3	328	[1] 1" 3/8 Z6	[1] 1" 3/8 Z6	[1] 1" 3/8 Z6	Y	-	9.290.023	25 26	std
	3.00	540	57.3	328	[1] 1" 3/8 Z6	-	[4] L 82 ø 40	X	-	9.290.704	21 22	std
M	**3.00**	540	57.3	328	[1] 1" 3/8 Z6	[1] 1" 3/8 Z6	[4] L 82 ø 40	X	-	9.290.709	27 28	std
	2.42	540	58.8	417	-	[1] 1" 3/8 Z6	[4] L 82 ø 40	Y	-	9.290.703	21 22	std
	2.42	540	58.8	417	[1] 1" 3/8 Z6	[1] 1" 3/8 Z6	[1] 1" 3/8 Z6	Y	-	9.290.021	25 26	std
	1.86	540	62.5	576	[1] 1" 3/8 Z6	[1] 1" 3/8 Z6	[1] 1" 3/8 Z6	Y	-	9.290.007	25 26	std
	1.86	540	62.5	576	[1] 1" 3/8 Z6	-	[1] 1" 3/8 Z6	X	-	9.290.008	23 24	std

T-290A

Code **290**

(0.01)

1 - Ruota libera / *Free wheel* 2 - Doppia ruota libera / *Double free wheel*

	i	N_1 [rpm]	P_1 [kW]	M_2 [Nm]	Shaft type X	Shaft type Y	Shaft type Z	Input	Features	Code	Mounting	
M	**1.86**	540	62.5	576	5 1" 3/4 Z6	-	1 1" 3/8 Z6	X	1 ccw	9.290.791	21 22	std
	1.63	1000	110.0	625	5 1" 3/4 Z6	5 1" 3/4 Z6	4 L 82 ø 40	X	2 ccw	9.290.107	36	std
	1.63	1000	110.0	625	5 1" 3/4 Z6	5 1" 3/4 Z6	4 L 82 ø 40	X	2 cw	9.290.108	36	std
	1.63	540	65.0	688	1 1" 3/8 Z6	1 1" 3/8 Z6	4 L 82 ø 40	X	-	9.290.706	27 28	std
	1.63	1000	91.2	528	-	1 1" 3/8 Z6	4 L 82 ø 40	Y	1 ccw	9.290.785	21 22	std
	1.47	540	69.8	814	1 1" 3/8 Z6	1 1" 3/8 Z6	4 L 82 ø 40	Y	1 ccw	9.290.629	27 28	std
	1.47	540	69.8	815	1 1" 3/8 Z6	1 1" 3/8 Z6	1 1" 3/8 Z6	Y	-	9.290.017	25 26	std
-	**1.00**	540	66.2	1135	1 1" 3/8 Z6	-	1 1" 3/8 Z6	Y	-	9.290.024	1 2	std
	1.00	540	66.2	1135	1 1" 3/8 Z6	-	1 1" 3/8 Z6	X	-	9.290.025	23 24	std
	1.00	540	66.2	1135	1 1" 3/8 Z6	1 1" 3/8 Z6	1 1" 3/8 Z6	X	-	9.290.026	25 26	std
	1.00	540	66.2	1135	1 1" 3/8 Z6	1 1" 3/8 Z6	4 L 82 ø 40	Y	-	9.290.770	27 28	std
R	**1.47**	540	62.5	1576	1 1" 3/8 Z6	1 1" 3/8 Z6	1 1" 3/8 Z6	Z	-	9.290.017	5 6	std
	1.47	540	62.5	1576	1 1" 3/8 Z6	-	1 1" 3/8 Z6	Z	-	9.290.016	23 24	std
	1.62	540	60.0	1667	1 1" 3/8 Z6	1 1" 3/8 Z6	4 L 82 ø 40	Z	-	9.290.706	5 6	std
	1.86	540	55.1	1758	1 1" 3/8 Z6	1 1" 3/8 Z6	1 1" 3/8 Z6	Z	-	9.290.007	5 6	std
	1.86	540	55.1	1758	1 1" 3/8 Z6	-	1 1" 3/8 Z6	Z	-	9.290.008	3 4	std
	2.07	540	51.5	1828	1 1" 3/8 Z6	1 1" 3/8 Z6	1 1" 3/8 Z6	Z	-	9.290.009	5 6	std
	2.42	540	41.9	1739	1 1" 3/8 Z6	1 1" 3/8 Z6	1 1" 3/8 Z6	Z	-	9.290.021	5 6	std
	3.00	540	33.0	1698	1 1" 3/8 Z6	1 1" 3/8 Z6	1 1" 3/8 Z6	Z	-	9.290.023	5 6	std

T-290HD

Code **290**

(0.01)

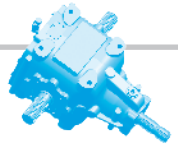

[kg]	41	[l]	2.3

Per configurazioni non a catalogo contattare Servizio Tecnico-Commerciale
For non-catalog configurations contact Technical-Commercial Service

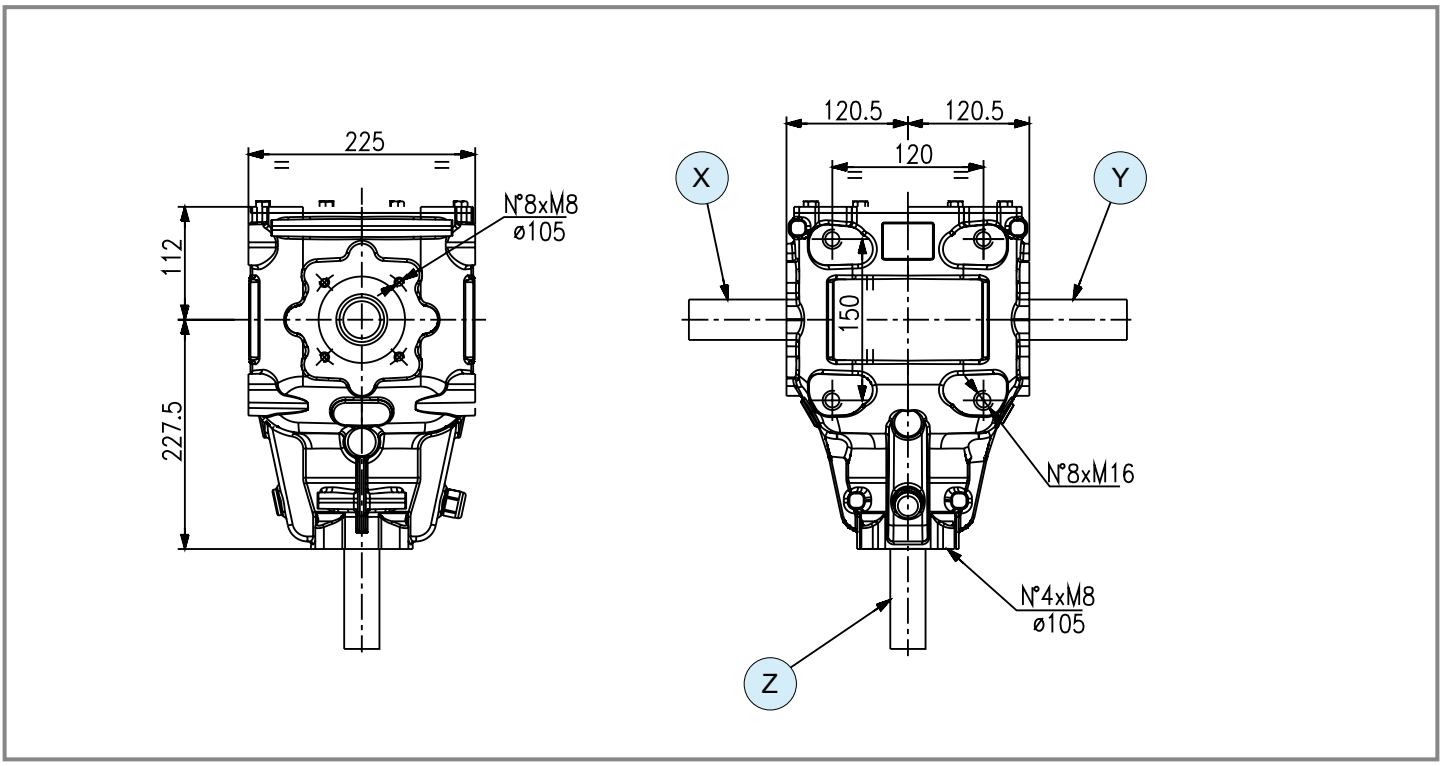

1 - Ruota libera / *Free wheel* 5 - Rinforzato / *Reinforced*

	i	N_1 [rpm]	P_1 [kW]	M_2 [Nm]	Shaft type X	Shaft type Y	Shaft type Z	Input	Features	Code	Mounting	
M	**3.00**	1000	96.0	312	1 — 1" 3/8 Z6	1 — 1" 3/8 Z6	1 — 1" 3/8 Z6	X	1 5	9.290.104	27 28	std
R	**3.00**	1000	58.0	1694	8 — 40x2x18 DIN5480	8 — 40x2x18 DIN5480	1 — 1" 3/8 Z6	Z	5	9.290.102	5 6	std

comer industries

T-292B

Code **292**

(0.01)

[kg]	33	[l]	2.5

Per configurazioni non a catalogo contattare Servizio Tecnico-Commerciale
For non-catalog configurations contact Technical-Commercial Service

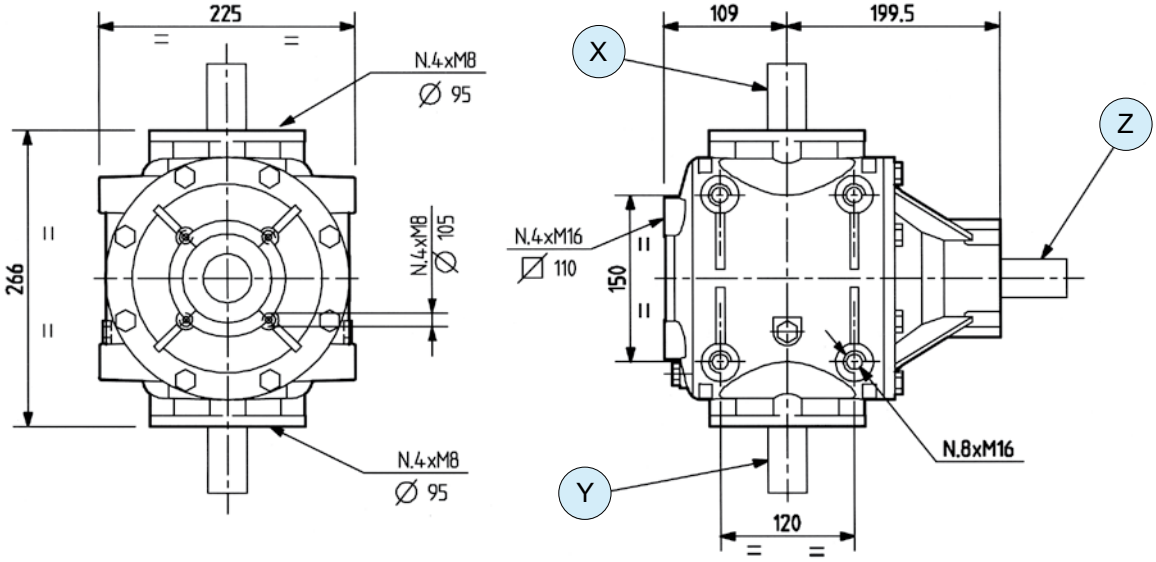

	i	N_1 [rpm]	P_1 [kW]	M_2 [Nm]	Shaft type X	Shaft type Y	Shaft type Z	Input	Features	Code	Mounting	
M	**1.86**	540	58.9	543	1 1" 3/8 Z6	1 1" 3/8 Z6	1 1" 3/8 Z6	Z	-	9.292.006	33 34	std
M	**1.86**	540	58.9	543	1 1" 3/8 Z6	4 shafts		Z	-	9.292.210	103	std
M	**1.47**	540	66.2	772	1 1" 3/8 Z6	1 1" 3/8 Z6	1 1" 3/8 Z6	Z	-	9.292.005	33 34	std
M	**3.00**	540	57.3	328	3 L 80 ø 35	-	1 1" 3/8 Z6	Z	-	9.292.303	31 32	std
-	**1.00**	540	66.2	1135	1 1" 3/8 Z6	1 1" 3/8 Z6	1 1" 3/8 Z6	Z	-	9.292.004	33 34	std
R	**1.47**	540	62.5	1576	1 1" 3/8 Z6	1 1" 3/8 Z6	1 1" 3/8 Z6	X	-	9.292.005	11 12	std
R	**1.86**	540	47.5	1515	1 1" 3/8 Z6	1 1" 3/8 Z6	5 1" 3/4 Z6	Z	-	9.292.024	33 34	std

T-279J | T-279A

Code **279.8** | Code **279**

(0.01)

[kg] 37 | [l] 2.5

Per configurazioni non a catalogo contattare Servizio Tecnico-Commerciale
For non-catalog configurations contact Technical-Commercial Service

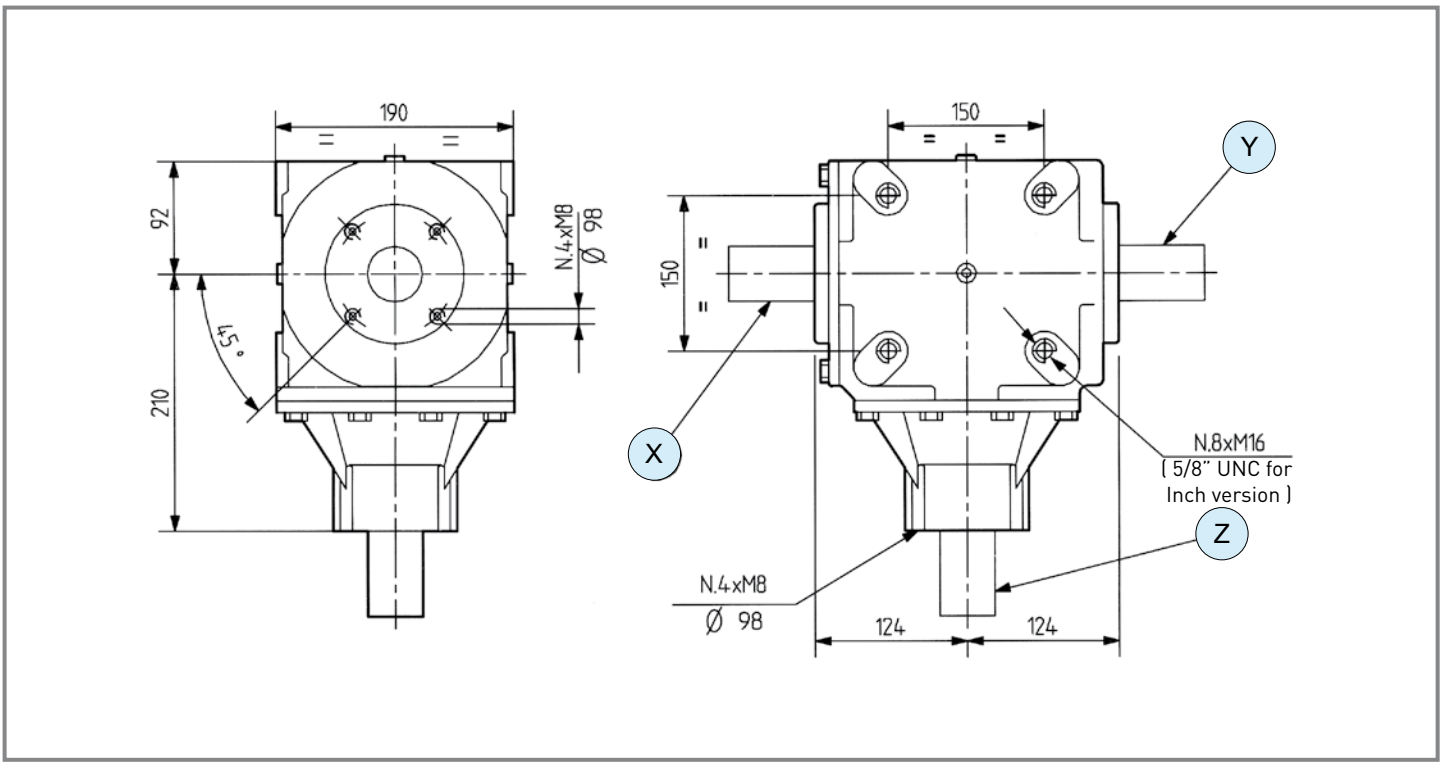

1 - Ruota libera / *Free wheel* * Versione in pollici / *Inch Version*

	i	N_1 [rpm]	P_1 [kW]	M_2 [Nm]	Shaft type X	Shaft type Y	Shaft type Z	Input	Features	Code	Mounting	
	1.82	540	62.5	589	1 — 1" 3/8 Z6	-	1 — 1" 3/8 Z6	X	-	9.279.331	232	std
	1.50	540	66.2	757	1 — 1" 3/8 Z6	1 — 1" 3/8 Z6	1 — 1" 3/8 Z6	X	-	9.279.876	5 6	std
	1.50	540	66.2	757	1 — 1" 3/8 Z6	1 — 1" 3/8 Z6	1 — 1" 3/8 Z6	X	-	9.279.857	27 28	std
	1.50	540	66.2	757	1 — 1" 3/8 Z6	1 — 1" 3/8 Z6	1 — 1" 3/8 Z6	Y	1 ccw	9.279.875	27 28	std
M ⇨ +	**1.50**	540	66.2	757	2 — 1" 3/8 Z21	2 — 1" 3/8 Z21	6 — 1" 3/4 Z20	Z	*	9.279.878	27 28	std
	1.35	540	73.5	934	1 — 1" 3/8 Z6	1 — 1" 3/8 Z6	1 — 1" 3/8 Z6	Z	-	9.279.016	33 34	std
	1.35	540	73.5	934	5 — 1" 3/4 Z6	-	5 — 1" 3/4 Z6	X	-	9.279.040	23 24	std
	1.35	540	73.5	934	1 — 1" 3/8 Z6	-	3 — L 82, ø 35	X	-	9.279.041	21 22	std
	1.35	540	73.5	934	6 — 1" 3/4 Z20	6 — 1" 3/4 Z20	6 — 1" 3/4 Z20	Z	-	9.279.852	33 34	std

comer industries

T-279J

Code **279.8**

T-279A

Code **279**

(0.01)

* Versione in pollici / *Inch Version*

	i	N_1 [rpm]	P_1 [kW]	M_2 [Nm]	Shaft type X	Shaft type Y	Shaft type Z	Input	Features	Code	Mounting	
-	**1.00**	540	73.5	1261	1 1" 3/8 Z6	1 1" 3/8 Z6	1 1" 3/8 Z6	Z	*	9.279.013	5 6	std
	1.00	540	73.5	1261	1 1" 3/8 Z6	1 1" 3/8 Z6	5 1" 3/4 Z6	Z	-	9.279.023	5 6	std
	1.00	540	73.5	1261	1 1" 3/8 Z6	1 1" 3/8 Z6	1 1" 3/8 Z6	Z	-	9.279.027	5 6	std
	1.00	1000	101.5	940	1 1" 3/8 Z6	-	1 1" 3/8 Z6	Z	-	9.279.048	29 30	std
R	**1.35**	540	66.2	1533	2 1" 3/8 Z21	2 1" 3/8 Z21	2 1" 3/8 Z21	Z	*	9.279.012	5 6	std
	1.35	540	66.2	1532	1 1" 3/8 Z6	1 1" 3/8 Z6	2 1" 3/8 Z21	-	-	9.279.045	5 6	std
	1.35	540	66.2	1533	-	6 1" 3/4 Z20	6 1" 3/4 Z20	Z	-	9.279.254	1 2	std
	1.35	540	73.5	1702	6 1" 3/4 Z20	6 1" 3/4 Z20	6 1" 3/4 Z20	Z	-	9.279.853	5 6	std
	1.50	540	58.9	1513	1 1" 3/8 Z6	1 1" 3/8 Z6	1 1" 3/8 Z6	Z	-	9.279.857	5 6	std
	1.50	540	58.9	1513	2 1" 3/8 Z21	2 1" 3/8 Z21	6 1" 3/4 Z20	X	*	9.279.878	13 14	std

T-22A

Code **262**

(0.01)

[kg] 29 | [l] 3.1

Per configurazioni non a catalogo contattare Servizio Tecnico-Commerciale
For non-catalog configurations contact Technical-Commercial Service

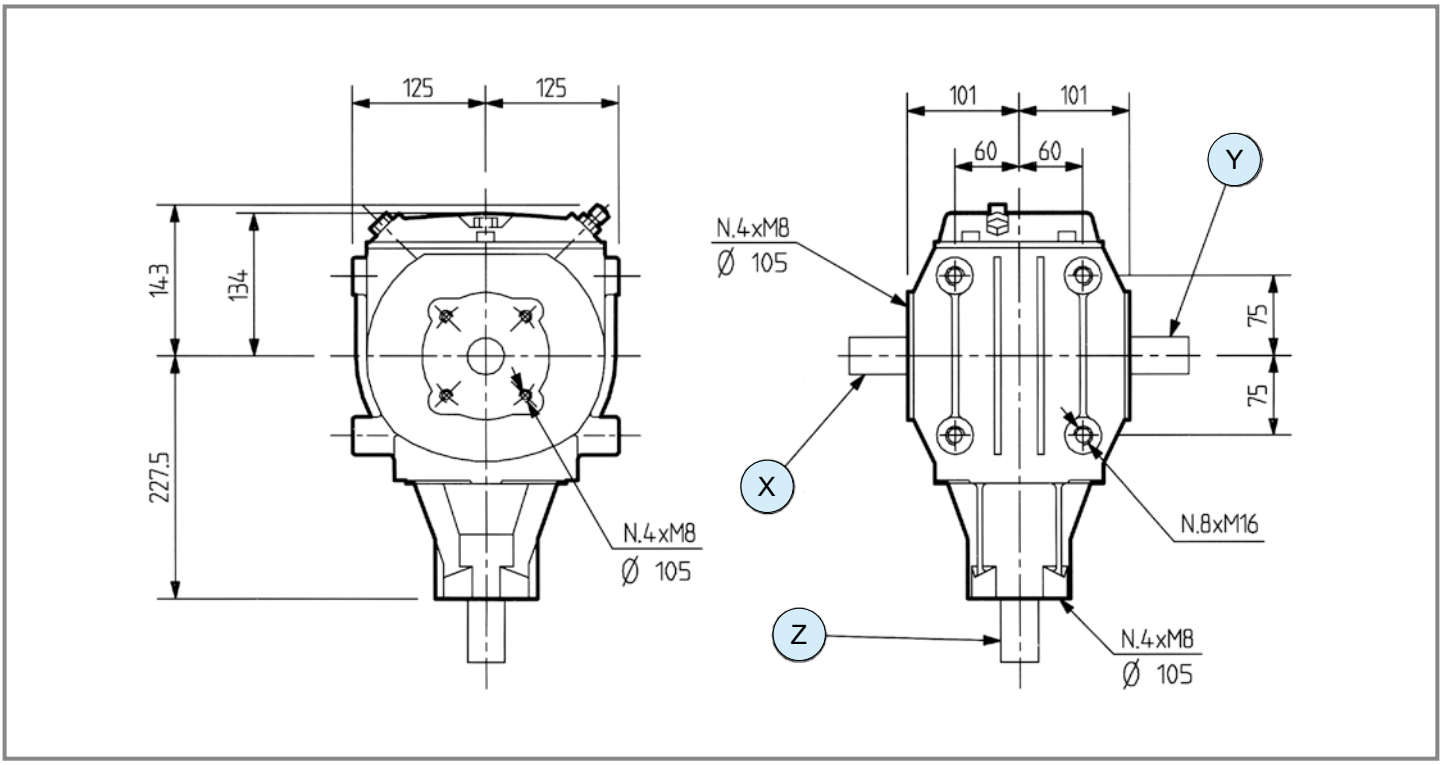

	i	N_1 [rpm]	P_1 [kW]	M_2 [Nm]	Shaft type X	Shaft type Y	Shaft type Z	Input	Features	Code	Mounting	
M	**6.14**	540	36.8	103	1 — 1" 3/8 Z6	1 — 1" 3/8 Z6	1 — 1" 3/8 Z6	Y	-	9.262.000	27 28	std
	4.11	540	44.2	184	5 — 1" 3/4 Z6	5 — 1" 3/4 Z6	1 — 1" 3/8 Z6	X	-	9.262.009	25 26	std
	4.11	540	44.2	184	1 — 1" 3/8 Z6	1 — 1" 3/8 Z6	1 — 1" 3/8 Z6	Y	-	9.262.027	27 28	std
	3.00	540	62.6	358	1 — 1" 3/8 Z6	-	3 — L 81.5, ø 35	X	-	9.262.351	23 24	std
	3.00	540	62.6	358	-	1 — 1" 3/8 Z6	1 — 1" 3/8 Z6	Y	-	9.262.004	21 22	std
	3.00	540	62.6	358	1 — 1" 3/8 Z6	1 — 1" 3/8 Z6	1 — 1" 3/8 Z6	X	-	9.262.008	25 26	std
	2.42	540	62.6	444	1 — 1" 3/8 Z6	1 — 1" 3/8 Z6	1 — 1" 3/8 Z6	Y	-	9.262.024	13 14	std
	2.42	540	62.6	444	1 — 1" 3/8 Z6	-	1 — 1" 3/8 Z6	X	-	9.262.228	23 24	std
	2.42	540	62.6	358	1 — 1" 3/8 Z6	-	1 — 1" 3/8 Z6	Y	-	9.262.022	21 22	std
	1.93	540	72.1	641	1 — 1" 3/8 Z6	1 — 1" 3/8 Z6	1 — 1" 3/8 Z6	X	-	9.262.007	25 26	std

T-22A

Code **262**

(0.01)

	i	N_1 [rpm]	P_1 [kW]	M_2 [Nm]	Shaft type X	Shaft type Y	Shaft type Z	Input	Features	Code	Mounting	
M	**1.60**	540	72.1	641	1 1" 3/8 Z6	1 1" 3/8 Z6	1 1" 3/8 Z6	X	-	9.262.051	25 26	std
R	**1.60**	540	66.2	1817	1 1" 3/8 Z6	1 1" 3/8 Z6	1 1" 3/8 Z6	Z	-	9.262.051	5 6	std
	1.60	540	66.2	1817	39 50	39 50	1 1" 3/8 Z6	Z	-	9.262.506	5 6	std
	1.93	540	60.4	1999	1 1" 3/8 Z6	1 1" 3/8 Z6	1 1" 3/8 Z6	Z	-	9.262.007	5 6	std
	1.93	540	60.4	1999	5 1" 3/4 Z6	5 1" 3/4 Z6	1 1" 3/8 Z6	Z	-	9.262.033	5 6	std
	2.42	540	47.8	1984	1 1" 3/8 Z6	-	1 1" 3/8 Z6	Z	-	9.262.022	1 2	std
	3.00	540	39.0	2007	1 1" 3/8 Z6	-	1 1" 3/8 Z6	Z	-	9.262.004	1 2	std
	3.00	540	39.0	2007	1 1" 3/8 Z6	1 1" 3/8 Z6	1 1" 3/8 Z6	Z	-	9.262.008	5 6	std
	4.11	540	27.2	1917	5 1" 3/4 Z6	5 1" 3/4 Z6	1 1" 3/8 Z6	Z	-	9.262.009	5 6	std
	4.11	540	27.2	1917	1 1" 3/8 Z6	1 1" 3/8 Z6	1 1" 3/8 Z6	Z	-	9.262.027	5 6	std
	6.14	540	14.7	1548	1 1" 3/8 Z6	1 1" 3/8 Z6	1 1" 3/8 Z6	Z	-	9.262.000	5 6	std

T-269A

Code **269**

(0.01)

[kg] 48 | [l] 3.25

Per configurazioni non a catalogo contattare Servizio Tecnico-Commerciale
For non-catalog configurations contact Technical-Commercial Service

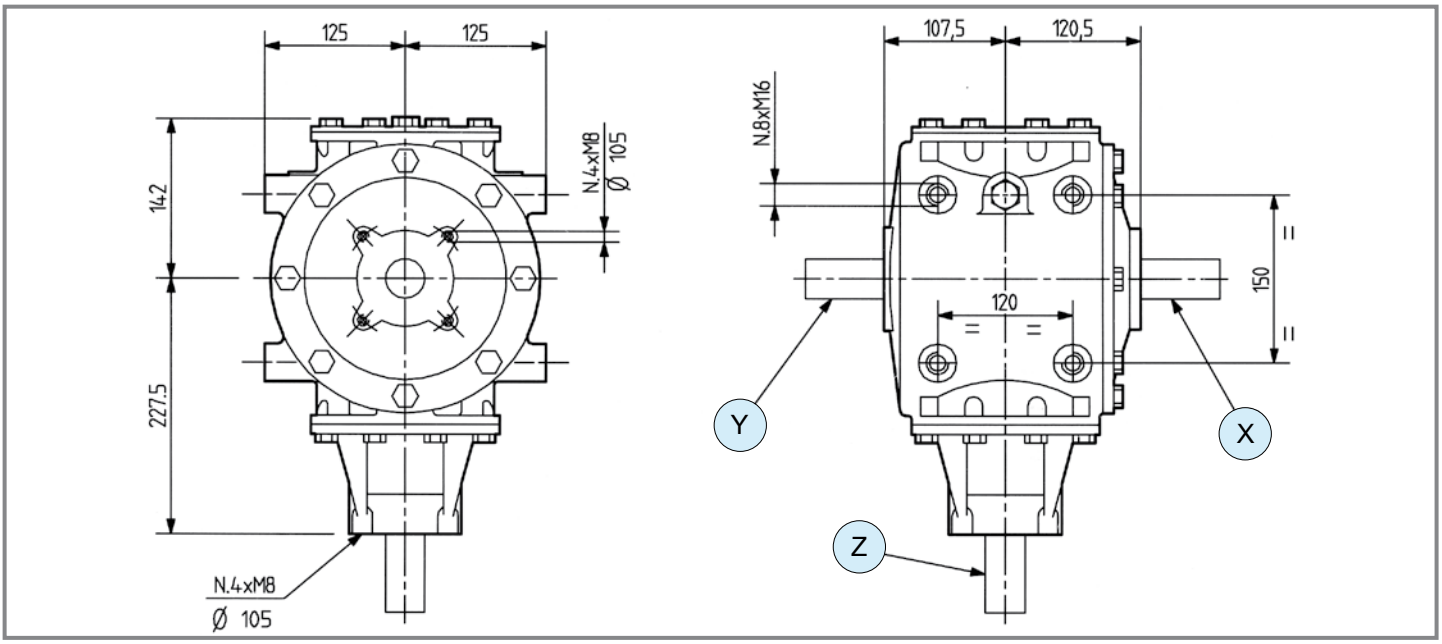

2 - Doppia ruota libera / *Double free wheel*

	i	N_1 [rpm]	P_1 [kW]	M_2 [Nm]	Shaft type X	Shaft type Y	Shaft type Z	Input	Features	Code	Mounting	
M	**1.63**	1000	106.6	606	5 1" 3/4 Z6	5 1" 3/4 Z6	4 L 82 ø 40	X	2 ccw	9.269.396	36	std
M	**1.63**	540	77.3	813	1 1" 3/8 Z6	1 1" 3/8 Z6	1 1" 3/8 Z6	Y	-	9.269.025	25 26	std
M	**1.42**	540	77.3	934	1 1" 3/8 Z6	1 1" 3/8 Z6	1 1" 3/8 Z6	Y	-	9.269.006	25 26	std
M	**1.35**	540	73.5	934	1 1" 3/8 Z6	1 1" 3/8 Z6	1 1" 3/8 Z6	Y	-	9.269.263	25 26	std
-	**1.00**	540	73.5	1261	-	1 1" 3/8 Z6	1 1" 3/8 Z6	Y	-	9.269.002	3 4	std
-	**1.00**	540	73.5	1261	5 1" 3/4 Z6	1 1" 3/8 Z6	1 1" 3/8 Z6	Z	-	9.269.001	5 6	std
-	**1.00**	540	77.2	1324	1 1" 3/8 Z6	4 shafts		X	-	9.269.040	97	std
R	**1.35**	540	66.2	1533	1 1" 3/8 Z6	1 1" 3/8 Z6	1 1" 3/8 Z6	Z	-	9.269.263	5 6	std
R	**1.42**	540	66.2	1612	1 1" 3/8 Z6	1 1" 3/8 Z6	1 1" 3/8 Z6	Z	-	9.269.006	5 6	std
R	**1.63**	540	62.5	1747	1 1" 3/8 Z6	1 1" 3/8 Z6	1 1" 3/8 Z6	Z	-	9.269.025	5 6	std
R	**1.92**	1000	80.9	1439	1 1" 3/8 Z6	4 shafts		Z	-	9.269.233	95	std

comer industries

T-269B

(0.01)

Code **269**

[kg]	40	[l]	3.3

Per configurazioni non a catalogo contattare Servizio Tecnico-Commerciale
For non-catalog configurations contact Technical-Commercial Service

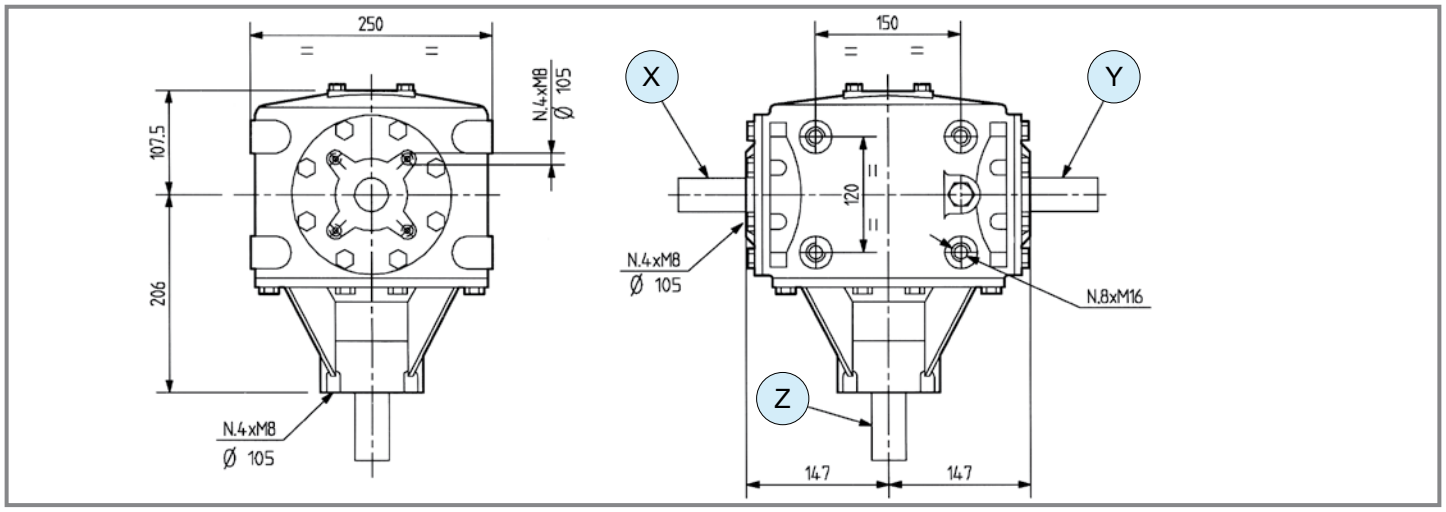

1 - Ruota libera / *Free wheel*

	i	N_1 [rpm]	P_1 [kW]	M_2 [Nm]	Shaft type X	Shaft type Y	Shaft type Z	Input	Features	Code	Mounting	
M	**3.00**	540	62.2	356	1 1" 3/8 Z6	1 1" 3/8 Z6	1 1" 3/8 Z6	Z	-	9.269.010	33 34	std
	2.42	540	62.2	441	1 1" 3/8 Z6	1 1" 3/8 Z6	1 1" 3/8 Z6	Z	-	9.269.009	33 34	std
	1.93	540	72.1	641	1 1" 3/8 Z6	1 1" 3/8 Z6	1 1" 3/8 Z6	Z	-	9.269.008	33 34	std
	1.93	540	72.1	641	1 1" 3/8 Z6	1 1" 3/8 Z6	5 1" 3/4 Z6	Z	-	9.269.223	33 34	std
	1.63	540	77.3	813	1 1" 3/8 Z6	1 1" 3/8 Z6	1 1" 3/8 Z6	Z	-	9.269.014	33 34	std
	1.63	540	77.3	813	1 1" 3/8 Z6	1 1" 3/8 Z6	5 1" 3/4 Z6	Z	1 ccw	9.269.221	33 34	std
	1.42	540	77.3	934	1 1" 3/8 Z6	1 1" 3/8 Z6	1 1" 3/8 Z6	Z	-	9.269.007	33 34	std
-	**1.00**	540	73.5	1261	1 1" 3/8 Z6	1 1" 3/8 Z6	5 1" 3/4 Z6	Z	1 ccw	9.269.219	5 6	std
	1.00	540	73.5	1261	1 1" 3/8 Z6	1 1" 3/8 Z6	1 1" 3/8 Z6	Z	-	9.269.032	5 6	std
R	**1.42**	540	66.2	1612	1 1" 3/8 Z6	1 1" 3/8 Z6	1 1" 3/8 Z6	X	-	9.269.007	11 12	std
	1.63	540	62.6	1750	1 1" 3/8 Z6	1 1" 3/8 Z6	1 1" 3/8 Z6	X	-	9.269.014	11 12	std
	1.93	540	60.4	1999	1 1" 3/8 Z6	1 1" 3/8 Z6	1 1" 3/8 Z6	Y	-	9.269.008	11 12	std
	2.42	540	47.8	1984	1 1" 3/8 Z6	1 1" 3/8 Z6	1 1" 3/8 Z6	X	-	9.269.009	11 12	std
	3.00	540	39.0	2007	1 1" 3/8 Z6	1 1" 3/8 Z6	1 1" 3/8 Z6	Y	-	9.269.010	11 12	std

T-301B

Code **301**

(0.01)

[kg] 61.5 | [l] 4.4

Per configurazioni non a catalogo contattare Servizio Tecnico-Commerciale
For non-catalog configurations contact Technical-Commercial Service

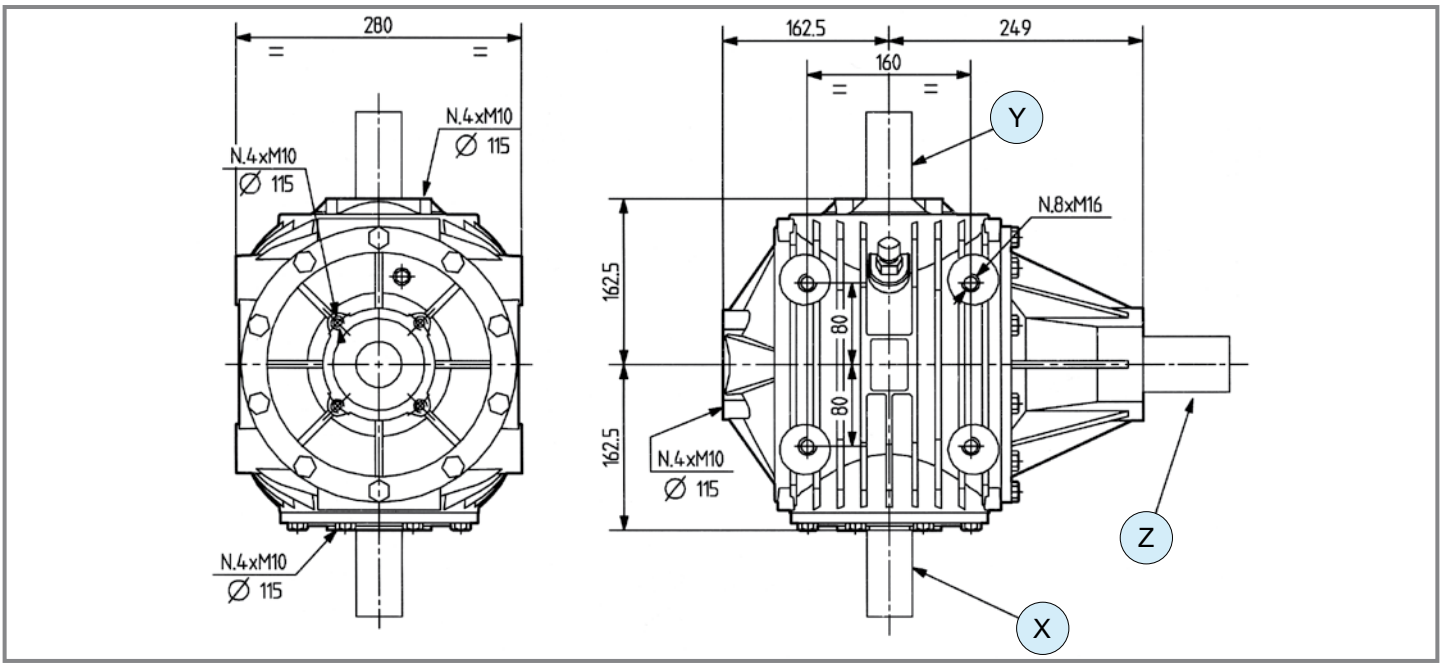

1 - Ruota libera / *Free wheel*

	i	N_1 [rpm]	P_1 [kW]	M_2 [Nm]	Shaft type X	Shaft type Y	Shaft type Z	Input	Features	Code	Mounting	
	3.00	540	53.0	303	5 1" 3/4 Z6	5 1" 3/4 Z6	5 1" 3/4 Z6	Y	-	9.301.001	27 28	std
	2.42	540	65.0	460	5 1" 3/4 Z6	5 1" 3/4 Z6	5 1" 3/4 Z6	Z	-	9.301.267	33 34	std
	1.93	540	80.9	719	1 1" 3/8 Z6	1 1" 3/8 Z6	5 1" 3/4 Z6	Z	1 ccw	9.301.045	33 34	std
	1.93	540	80.9	719	5 1" 3/4 Z6	5 1" 3/4 Z6	5 1" 3/4 Z6	Y	-	9.301.011	33 34	std
	1.90	540	117.6	1062	5 1" 3/4 Z6 4 shafts			X	-	9.301.247	97	std
M ⇨ +	**1.60**	1000	132.0	764	1 1" 3/8 Z6	1 1" 3/8 Z6	5 1" 3/4 Z6	Z	-	9.301.041	33 34	std
	1.60	540	95.6	1025	5 1" 3/4 Z6	5 1" 3/4 Z6	5 1" 3/4 Z6	Z	-	9.301.008	5 6	std
	1.60	540	79.9	857	5 1" 3/4 Z6	5 1" 3/4 Z6	5 1" 3/4 Z6	Z	-	9.301.006	33 34	std
	1.35	540	102.9	1307	1 1" 3/8 Z6	1 1" 3/8 Z6	5 1" 3/4 Z6	Z	-	9.301.058	33 34	std
	1.35	540	90.6	1151	1 1" 3/8 Z6	1 1" 3/8 Z6	5 1" 3/4 Z6	Z	-	9.301.233	95	std
	1.35	540	102.9	1013	5 1" 3/4 Z6	5 1" 3/4 Z6	5 1" 3/4 Z6	Z	1 ccw	9.301.280	33 34	std

T-301B

Code **301**

(0.01)

1 - Ruota libera / *Free wheel*

	i	N_1 [rpm]	P_1 [kW]	M_2 [Nm]	Shaft type X	Shaft type Y	Shaft type Z	Input	Features	Code	Mounting	
-	**1.00**	540	110.3	1892	5 1" 3/4 Z6	5 1" 3/4 Z6	5 1" 3/4 Z6	Z	-	9.301.016	5 6	std
	1.00	540	110.3	1892	5 1" 3/4 Z6	4 shafts		X	-	9.301.037	97	std
	1.00	540	133.3	2287	6 1" 3/4 Z20	6 1" 3/4 Z20	6 1" 3/4 Z20	Z	1 ccw	9.301.346	5 6	std
	1.00	1000	152.2	1410	6 1" 3/4 Z20	4 shafts		Y	-	9.301.287	95	std
	1.00	1000	150.7	1396	5 1" 3/4 Z6	5 1" 3/4 Z6	5 1" 3/4 Z6	Z	-	9.301.000	33 34	std
R	**1.35**	540	95.6	2213	5 1" 3/4 Z6	5 1" 3/4 Z6	5 1" 3/4 Z6	Z	-	9.301.276	5 6	std
	1.60	540	88.2	2420	5 1" 3/4 Z6	5 1" 3/4 Z6	5 1" 3/4 Z6	Z	-	9.301.008	5 6	std
	1.60	540	88.2	2420	5 1" 3/4 Z6		5 1" 3/4 Z6	Z	-	9.301.031	3 4	std
	1.90	540	88.2	2877	5 1" 3/4 Z6	5 1" 3/4 Z6	5 1" 3/4 Z6	Z	-	9.301.053	5 6	std
	1.90	1000	106.5	1874	5 1" 3/4 Z6	4 shafts		Z	-	9.301.247	97	std
	1.93	540	77.2	2555	5 1" 3/4 Z6	5 1" 3/4 Z6	5 1" 3/4 Z6	Z	-	9.301.032	5 6	std
	1.93	540	77.2	2555	5 1" 3/4 Z6	4 shafts		X	-	9.301.038	93	std
	1.93	1000	106.5	1904	6 1" 3/4 Z20	6 1" 3/4 Z20	6 1" 3/4 Z20	Z	1 ccw	9.301.281	5 6	std
	1.93	1000	106.6	1905	5 1" 3/4 Z6	5 1" 3/4 Z6	5 1" 3/4 Z6	Y	-	9.301.024	13 14	std
	2.42	540	80.9	3357	5 1" 3/4 Z6	5 1" 3/4 Z6	5 1" 3/4 Z6	Y	-	9.301.267	13 14	std
	3.00	540	45.6	2424	5 1" 3/4 Z6	5 1" 3/4 Z6	5 1" 3/4 Z6	Z	-	9.301.001	5 6	std

T-331A

Code **331**

(0.01)

[kg] 112 | [l]

Per configurazioni non a catalogo contattare Servizio Tecnico-Commerciale
For non-catalog configurations contact Technical-Commercial Service

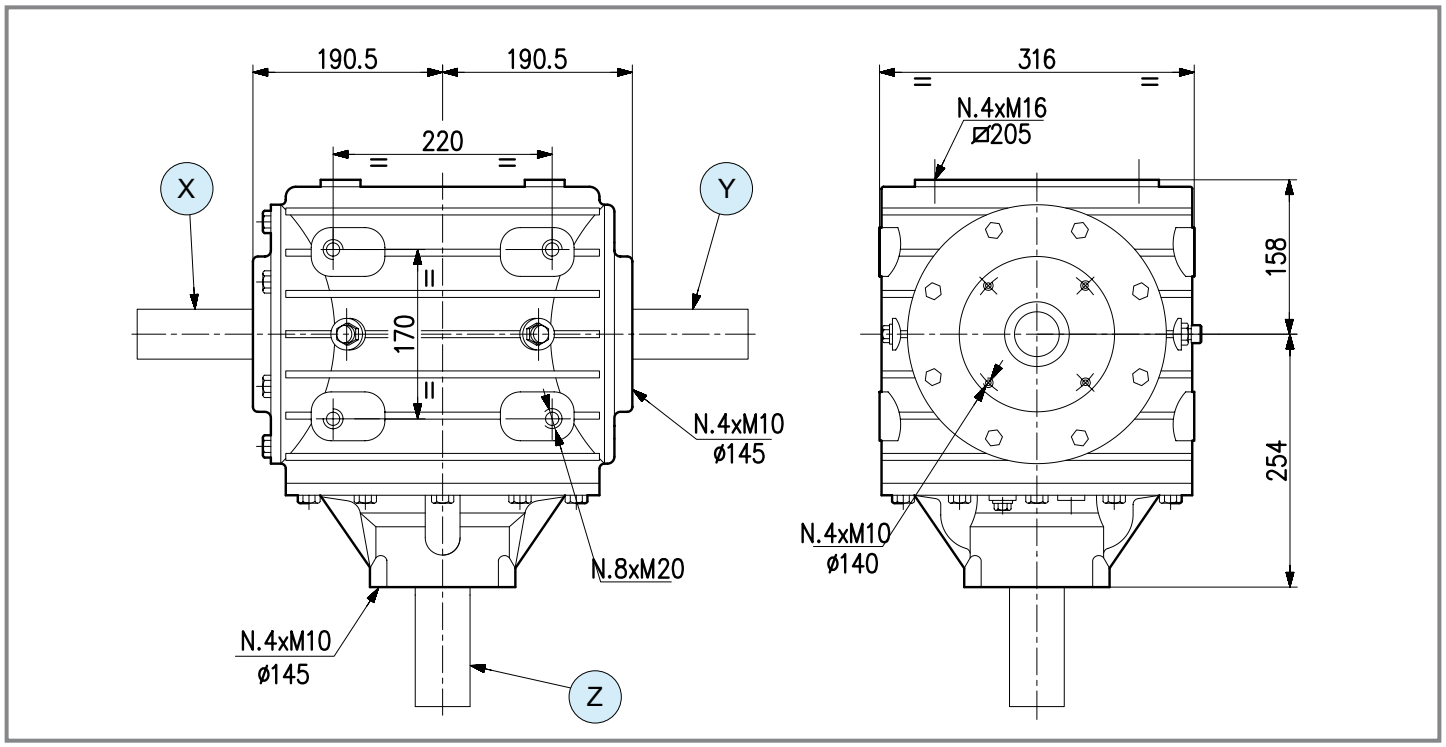

1 - Ruota libera / *Free wheel*

	i	N_1 [rpm]	P_1 [kW]	M_2 [Nm]	Shaft type X	Shaft type Y	Shaft type Z	Input	Features	Code	Mounting	
M	**3.27**	540	150.0	787	5 1" 3/4 Z6	5 1" 3/4 Z6	5 1" 3/4 Z6	X	-	9.331.020	25 26	special
	1.94	540	205.9	1820	5 1" 3/4 Z6	5 1" 3/4 Z6	5 1" 3/4 Z6	X	-	9.331.001	33 34	std
	1.53	1000	242.0	1465	6 1" 3/4 Z20	6 1" 3/4 Z20	6 1" 3/4 Z20	Z	1 ccw	9.331.206	33 34	std
	1.35	1000	205.9	1413	6 1" 3/4 Z20	6 1" 3/4 Z20	6 1" 3/4 Z20	Z	1 ccw	9.331.012	33 34	std
-	**1.00**	540	176.5	3027	5 1" 3/4 Z6	5 1" 3/4 Z6	6 1" 3/4 Z20	Z	-	9.331.002	5 6	std
	1.00	1000	264.7	2452								std
	1.00	540	176.5	3027	6 1" 3/4 Z20	6 1" 3/4 Z20	6 1" 3/4 Z20	Z	-	9.331.019	5 6	std
	1.00	1000	264.7	2452								std
	1.00	540	176.5	3027	5 1" 3/4 Z6	5 1" 3/4 Z6	5 1" 3/4 Z6	Z	-	9.331.016	5 6	std
	1.00	1000	264.7	2452								std

comer industries

T-331A

Code **331**

(0.01)

	i	N_1 [rpm]	P_1 [kW]	M_2 [Nm]	4 - Attacco pompa / *Pump* Shaft type X	Y	Z	Input	Features	Code	Mounting	
-	**1.00**	540	176.5	3027	6 1" 3/4 Z20	6 1" 3/4 Z20	6 1" 3/4 Z20	Z	-	9.331.019	5 6	std
-	**1.00**	1000	264.7	2452								std
-	**1.00**	1000	264.7	2452	6 1" 3/4 Z20	6 1" 3/4 Z20	6 1" 3/4 Z20	Z	4	9.331.204	5 6	std
R	**1.35**	1000	205.9	2574	6 1" 3/4 Z20	6 1" 3/4 Z20	6 1" 3/4 Z20	Y	-	9.331.012	13 14	std
R	**1.35**	1000	205.9	2574	5 1" 3/4 Z6	5 1" 3/4 Z6	6 1" 3/4 Z20	Z	-	9.331.052	5 6	std
R	**1,35**	1000	205,9	2574	5 1" 3/4 Z6	5 1" 3/4 Z6	6 1" 3/4 Z20	Z	-	9.331.036	5 6	std
R	**1.94**	540	147.0	4891	5 1" 3/4 Z6	5 1" 3/4 Z6	5 1" 3/4 Z6	Z	-	9.331.001	5 6	std
R	**2,54**	1000	147.0	3458	5 1" 3/4 Z6	5 1" 3/4 Z6	82 L 99 ø 65	Y	-	9.331.030	11 12	std
R	**3.27**	540	80.9	4537	5 1" 3/4 Z6	5 1" 3/4 Z6	5 1" 3/4 Z6	Z	-	9.331.020	5 6	std

T-332A

Code **332**

(0.01)

[kg] 118 | [l]

Per configurazioni non a catalogo contattare Servizio Tecnico-Commerciale
For non-catalog configurations contact Technical-Commercial Service

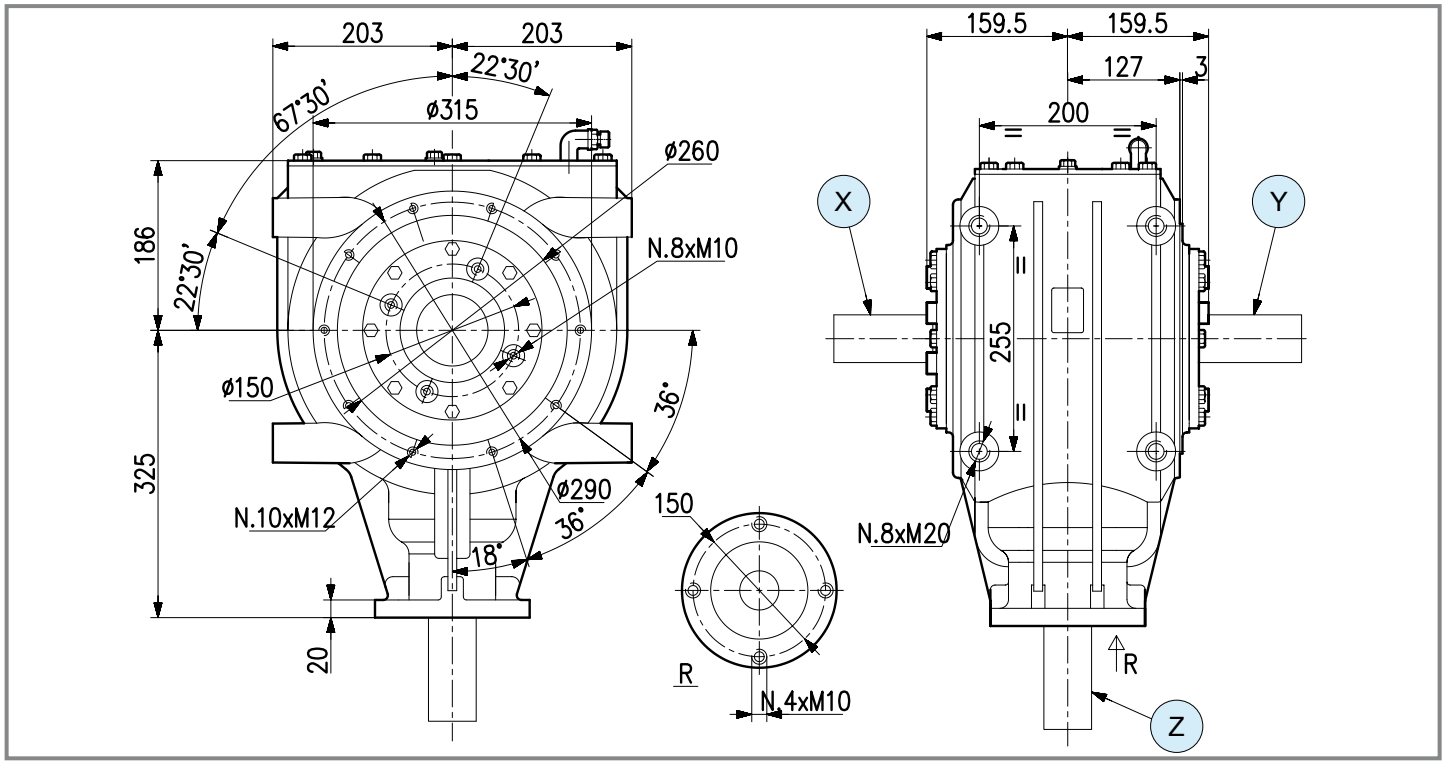

1 - Ruota libera / *Free wheel* 4 - Attacco pompa / *Pump*

	i	N_1 [rpm]	P_1 [kW]	M_2 [Nm]	Shaft type X	Shaft type Y	Shaft type Z	Input	Features	Code	Mounting	
M	**1.94**	1000	257.0	4618	6 1" 3/4 Z20	6 1" 3/4 Z20	6 1" 3/4 Z20	y	-	9.332.206	27 28	std
R	**1.94**	540	183.8	5990	6 1" 3/4 Z20	6 1" 3/4 Z20	6 1" 3/4 Z20	Z	-	9.332.000	5 6	std
	1.94	1000	257.3	4528								std
	1.94	1000	257.3	4618	6 1" 3/4 Z20	6 1" 3/4 Z20	6 1" 3/4 Z20	Z	1 ccw	9.332.207	5 6	std
	1.94	540	183.8	6440	6 1" 3/4 Z20	6 1" 3/4 Z20	6 1" 3/4 Z20	Y	4	9.332.208	5 6	std
	1.94	1000	257.8	4632								std
	2.50	1000	220.5	5105	6 1" 3/4 Z20	6 1" 3/4 Z20	6 1" 3/4 Z20	Z	-	9.332.205	5 6	std
	2.50	1000	220.5	5105	35 65x60 DIN5482	35 65x60 DIN5482	6 1" 3/4 Z20	Z	-	9.332.010	5 6	std
	3.00	540	125.0	6432	35 65x60 DIN5482	35 65x60 DIN5482	5 1" 3/4 Z6	Z	-	9.332.006	5 6	std

comer industries

T-332A

Code **332**

(0.01)

	i	N_1 [rpm]	P_1 [kW]	M_2 [Nm]	Shaft type X	Shaft type Y	Shaft type Z	Input	Features	Code	Mounting	
R	**3.00**	540	125.0	6432	6 1" 3/4 Z20	6 1" 3/4 Z20	6 1" 3/4 Z20	Z	-	9.332.003	5 6	std
	3.00	1000	176.4	4901								std
	4.25	540	77.2	5627	6 1" 3/4 Z20	6 1" 3/4 Z20	6 1" 3/4 Z20	Z	-	9.332.002	5 6	special
	4.25	1000	114.0	4487								special
	4.25	540	77.2	5627	35 65x60 DIN5482	35 65x60 DIN5482	5 1" 3/4 Z6	Z	-	9.332.004	5 6	special

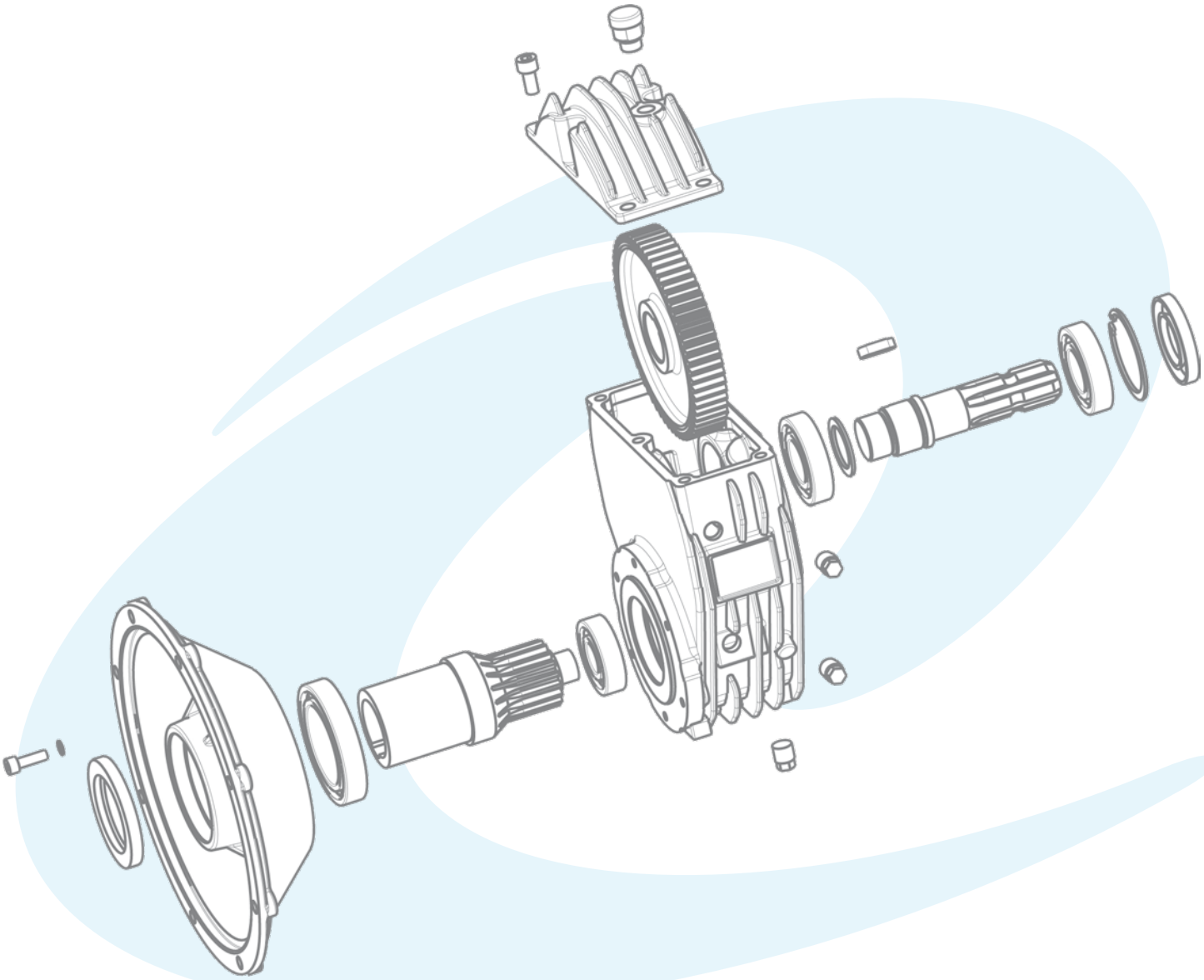

Per configurazioni non a catalogo contattare Servizio Tecnico-Commerciale
For non-catalog configurations contact Technical-Commercial Service

(0.02)

Gamma paralleli multifunzione
Multifunction parallel gearboxes

RINVII PARALLELI
PARALLEL GEARBOXES

(0.02)

	i	P_{1-max} [kW]	M_{2-max} [Nm]	Tipologia alberi disponibili *Available type of shafts*	p.
A-3A	M + 1.23÷6.00 - = = - R + 1.23÷5.00	33.1	626	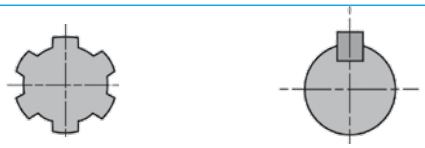	54
A-624A	M + 3.50÷6.90 - = = - R + 3.50÷6.90	31.6	876	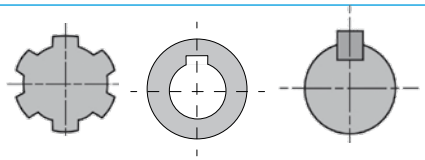	56
MR-90	M + 1.90 - = = 1.00 R + 1.90	64.0	1074	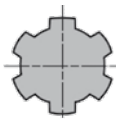	57
A-4A	M + 1.48÷7.00 - = = 1.00 R + 1.48÷7.00	66.2	1095	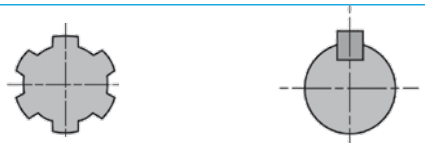	58
A-629A	M + 1.77÷3.80 - = = - R + -	130.0	680	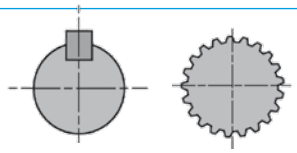	60
A-623A	M + 1.60 - = = - R + 1.60	11.0	203	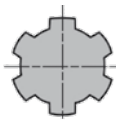	61
A-20A	M + 1.88 - = = - R + 1.88	55.2	961		62
A-16A	M + - - = = 1.00 R + -	62.6	1074		63

A-3A

Code **602**

(0.02)

[kg] 18 | [l] 0.6

Per configurazioni non a catalogo contattare Servizio Tecnico-Commerciale
For non-catalog configurations contact Technical-Commercial Service

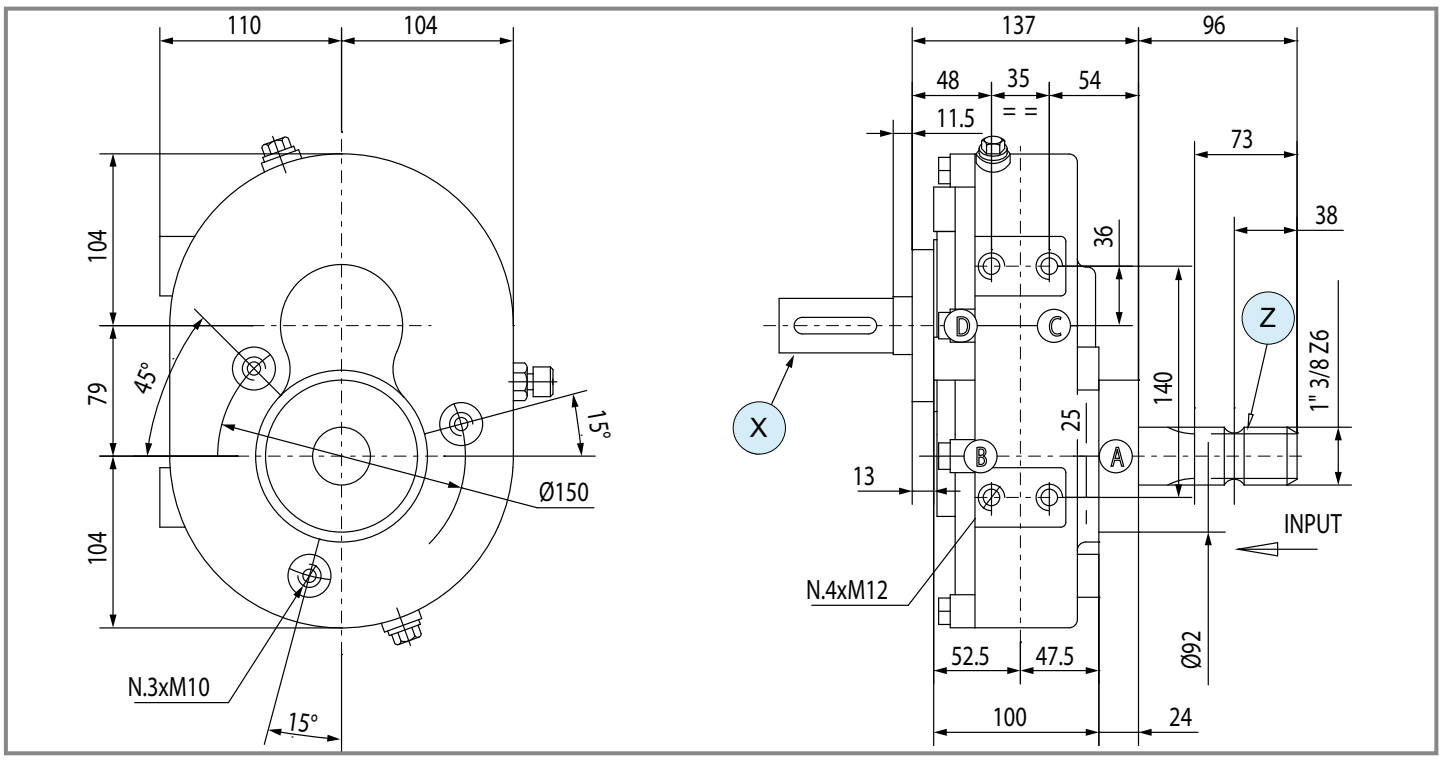

	i	N_1 [rpm]	P_1 [kW]	M_2 [Nm]	Shaft type X	Shaft type Y	Shaft type Z	Input	Features	Code	Mounting	
M	**6.00**	540	16.9	48	20 L 60 ø 28	-	1 1" 3/8 Z6	Z	-	9.602.006	41 42	std
	5.00	540	22.1	76	20 L 60 ø 28	-	1 1" 3/8 Z6	Z	-	9.602.005	41 42	std
	3.58	540	24.7	118	14 L 68 ø 33	-	1 1" 3/8 Z6	Z	-	9.602.009	41 42	std
	3.58	540	24.7	118	1 1" 3/8 Z6	-	1 1" 3/8 Z6	Z	-	9.602.015	41 42	std
	2.92	540	27.2	160	14 L 68 ø 33	-	1 1" 3/8 Z6	Z	-	9.602.000	41 42	std
	2.92	540	27.2	160	1 1" 3/8 Z6	-	1 1" 3/8 Z6	Z	-	9.602.014	41 42	std
	2.00	540	29.4	252	14 L 68 ø 33	-	1 1" 3/8 Z6	Z	-	9.602.008	41 42	std
	2.00	540	29.4	252	1 1" 3/8 Z6	-	1 1" 3/8 Z6	Z	-	9.602.013	41 42	std
	1.50	540	30.9	353	1 1" 3/8 Z6	-	1 1" 3/8 Z6	Z	-	9.602.012	41 42	std
	1.23	540	33.1	462	1 1" 3/8 Z6	-	1 1" 3/8 Z6	Z	-	9.602.010	41 42	std

A-3A

Code **602**

(0.02)

	i	N_1 [rpm]	P_1 [kW]	M_2 [Nm]	Shaft type X	Shaft type Y	Shaft type Z	Input	Features	Code	Mounting	
-	**1.00**	540	22.1	379	1 1" 3/8 Z6	-	1 1" 3/8 Z6	Z	-	9.602.003	41 42	std
-	**1.00**	540	22.1	379	1 1" 3/8 Z6	-	1 1" 3/8 Z6	X	-	9.602.018	41 42	std
-	**1.00**	540	22.1	379	1 1" 3/8 Z6	-	1 1" 3/8 Z6	X	-	9.602.200	41 42	std
R	**1.23**	540	25.8	544	1 1" 3/8 Z6	-	1 1" 3/8 Z6	X	-	9.602.010	51 52	std
R	**1.50**	540	18.4	473	1 1" 3/8 Z6	-	1 1" 3/8 Z6	X	-	9.602.012	51 52	std
R	**2.00**	540	15.5	532	1 1" 3/8 Z6	-	1 1" 3/8 Z6	X	-	9.602.013	51 52	std
R	**2.92**	540	12.5	626	1 1" 3/8 Z6	-	1 1" 3/8 Z6	X	-	9.602.014	51 52	std
R	**2.92**	540	12.5	626	14 L 68 ø 33	-	1 1" 3/8 Z6	X	-	9.602.000	51 52	std
R	**3.58**	540	9.6	589	1 1" 3/8 Z6	-	1 1" 3/8 Z6	X	-	9.602.015	51 52	std
R	**5.00**	540	7.4	635	20 L 60 ø 28	-	1 1" 3/8 Z6	X	-	9.602.005	51 52	std

A-624A

Code **624**

(0.02)

[kg] 17 | [l] 0.45

Per configurazioni non a catalogo contattare Servizio Tecnico-Commerciale
For non-catalog configurations contact Technical-Commercial Service

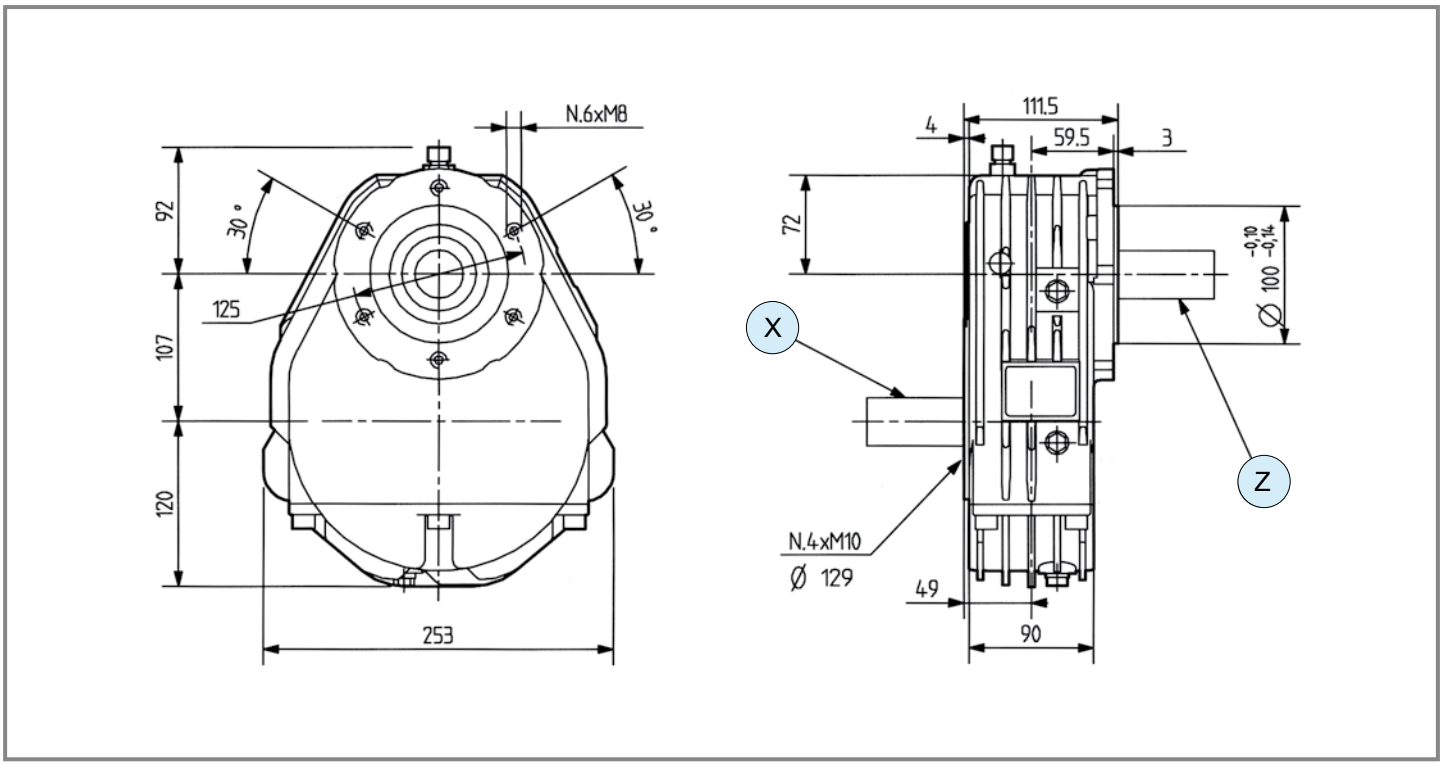

	i	N_1 [rpm]	P_1 [kW]	M_2 [Nm]	Shaft type X	Shaft type Y	Shaft type Z	Input	Features	Code	Mounting	
M	**6.90**	540	25.8	64	1 — 1" 3/8 Z6	-	3 — L 93.5 — ø 35	X	-	9.624.000	41 42	std
M	**6.90**	540	25.8	64	1 — 1" 3/8 Z6	-	1 — 1" 3/8 Z6	X	-	9.624.012	41 42	std
M	**6.90**	435	25.8	64	1 — 1" 3/8 Z6	-	76 — ø42	Z	-	9.624.019	41 42	Std
M	**3.50**	540	31.6	155	1 — 1" 3/8 Z6	-	3 — L 56.2 — ø 35	X	-	9.624.013	41 42	std
R	**3.50**	540	13.2	792	1 — 1" 3/8 Z6	-	3 — L 56.2 — ø 35	Z	-	9.624.013	51 52	std
R	**6.90**	540	7.4	876	1 — 1" 3/8 Z6	-	1 — 1" 3/8 Z6	Z	-	9.624.012	51 52	std
R	**6.90**	540	7.4	876	1 — 1" 3/8 Z6	-	3 — L 93.8 — ø 35	Z	-	9.624.000	51 52	std

MR-90

Code **95090**

(0.02)

[kg] 27.5 | [l] 0.8

Per configurazioni non a catalogo contattare Servizio Tecnico-Commerciale
For non-catalog configurations contact Technical-Commercial Service

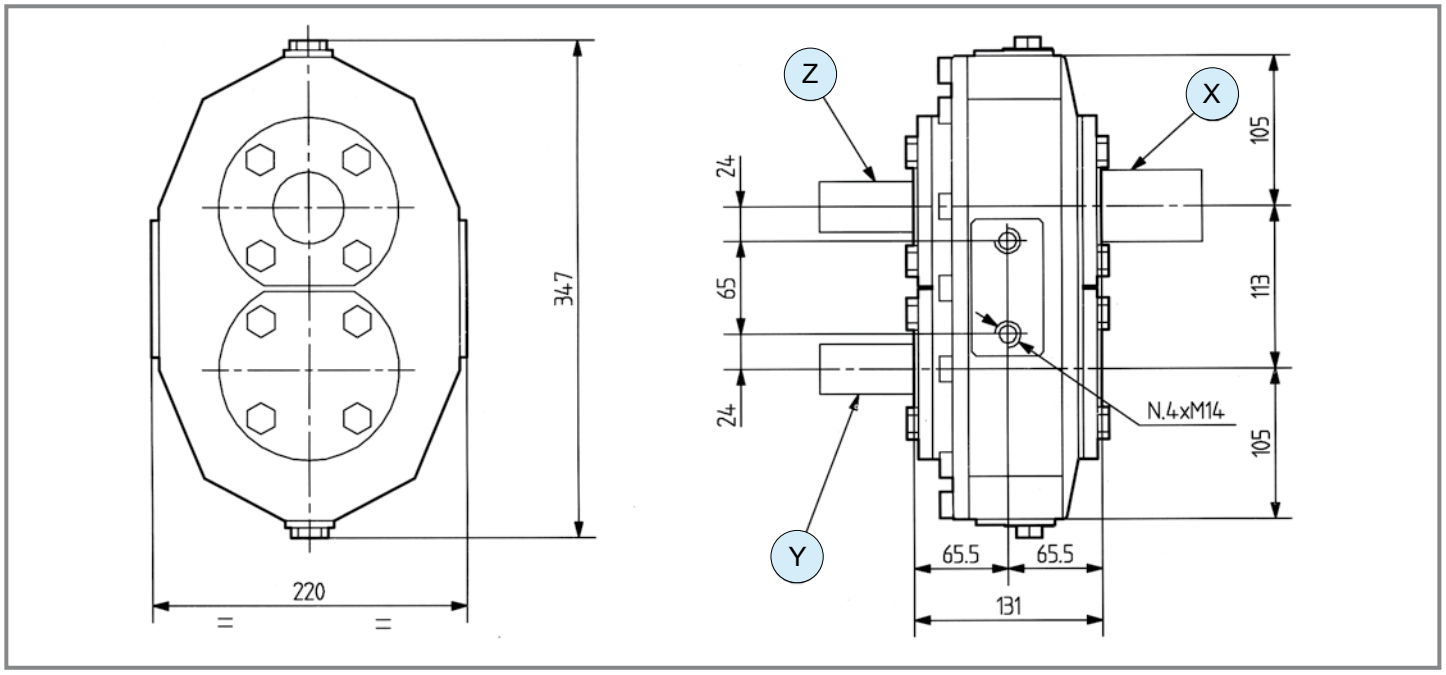

	i	N_1 [rpm]	P_1 [kW]	M_2 [Nm]	Shaft type X	Shaft type Y	Shaft type Z	Input	Features	Code	Mounting	
M	**1.90**	540	64.0	578	1 1" 3/8 Z6	1 1" 3/8 Z6	-	X	-	95090.002.019	41 42	std
-	**1.00**	540	62.6	1074	1 1" 3/8 Z6	1 1" 3/8 Z6	-	X	-	95090.002.010	41 42	std
	1.00	540	62.6	1074	1 1" 3/8 Z6	1 1" 3/8 Z6	1 1" 3/8 Z6	Z	-	95090.012.010	43 44	std
R	**1.90**	540	31.6	1030	1 1" 3/8 Z6	1 1" 3/8 Z6	-	X	-	95090.003.019	51 52	std
	1.90	540	31.6	1030	1 1" 3/8 Z6	1 1" 3/8 Z6	1 1" 3/8 Z6	X	-	95090.004.019	43 44	std

A-4A

Code **603**

(0.02)

[kg] 41 | [l] 1.0

Per configurazioni non a catalogo contattare Servizio Tecnico-Commerciale
For non-catalog configurations contact Technical-Commercial Service

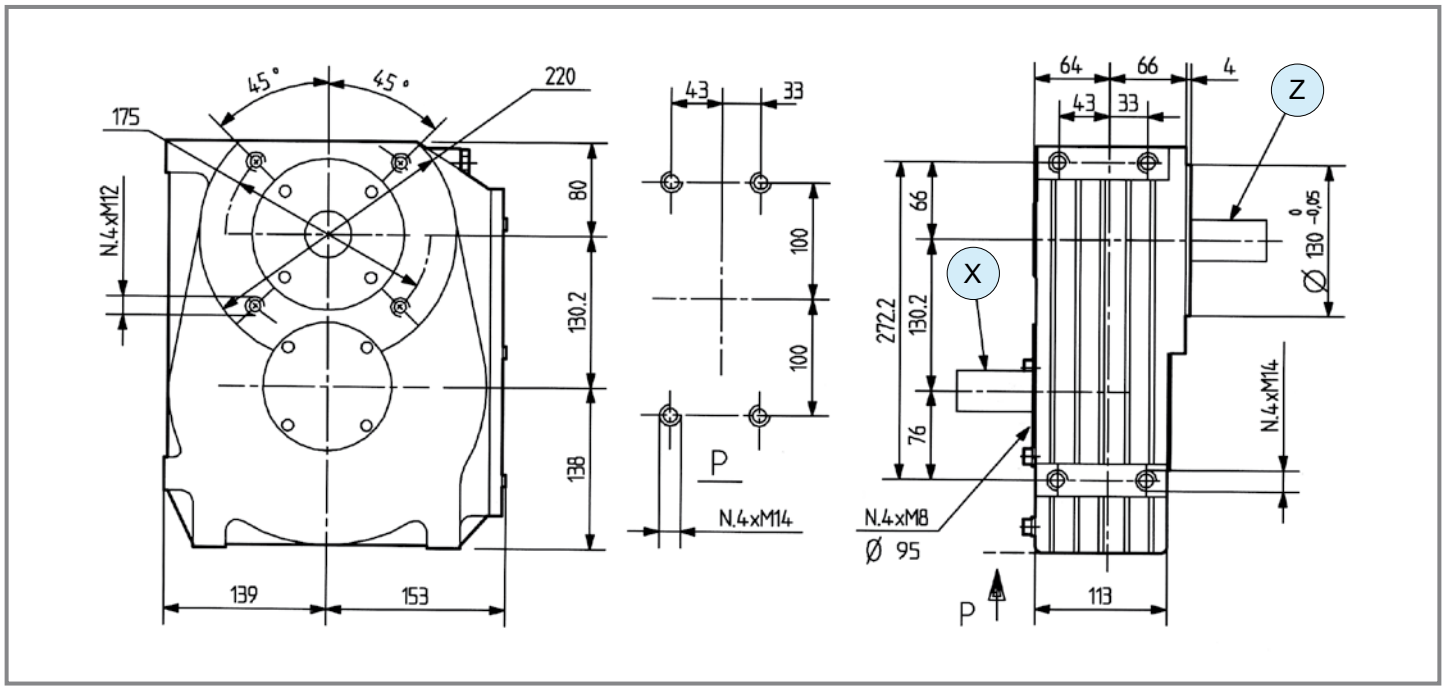

	i	N_1 [rpm]	P_1 [kW]	M_2 [Nm]	Shaft type X	Shaft type Y	Shaft type Z	Input	Features	Code	Mounting	
	7.00	540	44.2	108	1 — 1" 3/8 Z6	-	L 76 ø 33	X	-	9.603.006	41 42	std
	6.20	540	51.5	142	1 — 1" 3/8 Z6	-	L 85 ø 35	X	-	9.603.005	41 42	std
	5.00	540	55.2	189	1 — 1" 3/8 Z6	-	L 85 ø 35	X	-	9.603.000	41 42	std
	4.00	540	56.7	243	1 — 1" 3/8 Z6	-	L 85 ø 35	X	-	9.603.007.B	46 47	std
M	**3.80**	540	58.0	262	1 — 1" 3/8 Z6	-	L 85 ø 35	X	-	9.603.012	41 42	std
	3.00	540	59.6	341	1 — 1" 3/8 Z6	-	L 85 ø 35	X	-	9.603.011	41 42	std
	2.43	540	62.6	442	1 — 1" 3/8 Z6	-	L 85 ø 35	X	-	9.603.010	41 42	std
	2.00	540	64.0	549	1 — 1" 3/8 Z6	-	L 85 ø 35	X	-	9.603.009	41 42	std
	1.48	540	66.2	767	1 — 1" 3/8 Z6	-	L 85 ø 35	X	-	9.603.008	41 42	std

A-4A

Code **603**

(0.02)

[kg] [l]

	i	N_1 [rpm]	P_1 [kW]	M_2 [Nm]	Shaft type X	Shaft type Y	Shaft type Z	Input	Features	Code	Mounting	
-	**1.00**	540	62.6	1074	1 1" 3/8 Z6	-	1 1" 3/8 Z6	Z	-	9.603.203	51 52	std
	1.48	540	42.7	1084	1 1" 3/8 Z6	-	L 85 ø 35	Z	-	9.603.008	51 52	std
	2.00	540	31.6	1084	1 1" 3/8 Z6	-	L 85 ø 35	Z	-	9.603.009	51 52	std
	2.43	540	25.8	1075	1 1" 3/8 Z6	-	L 85 ø 35	Z	-	9.603.010	51 52	std
	3.00	540	21.0	1081	1 1" 3/8 Z6	-	L 85 ø 35	Z	-	9.603.011	51 52	std
R	**3.80**	540	28.7	1477	1 1" 3/8 Z6	-	L 85 ø 35	Z	-	9.603.012	51 52	std
	4.00	540	15.8	1084	1 1" 3/8 Z6	-	L 85 ø 35	Z	-	9.603.007.B	57 58	std
	5.00	540	12.5	1072	1 1" 3/8 Z6	-	L 85 ø 35	Z	-	9.603.000	51 52	std
	6.20	540	10.3	1095	1 1" 3/8 Z6	-	L 85 ø 35	Z	-	9.603.005	51 52	std
	7.00	540	8.8	1057	1 1" 3/8 Z6	-	L 76 ø 33	Z	-	9.603.006	51 52	std

A-629A

Code **629**

(0.02)

[kg] 72 | [l] -

Per configurazioni non a catalogo contattare Servizio Tecnico-Commerciale
For non-catalog configurations contact Technical-Commercial Service

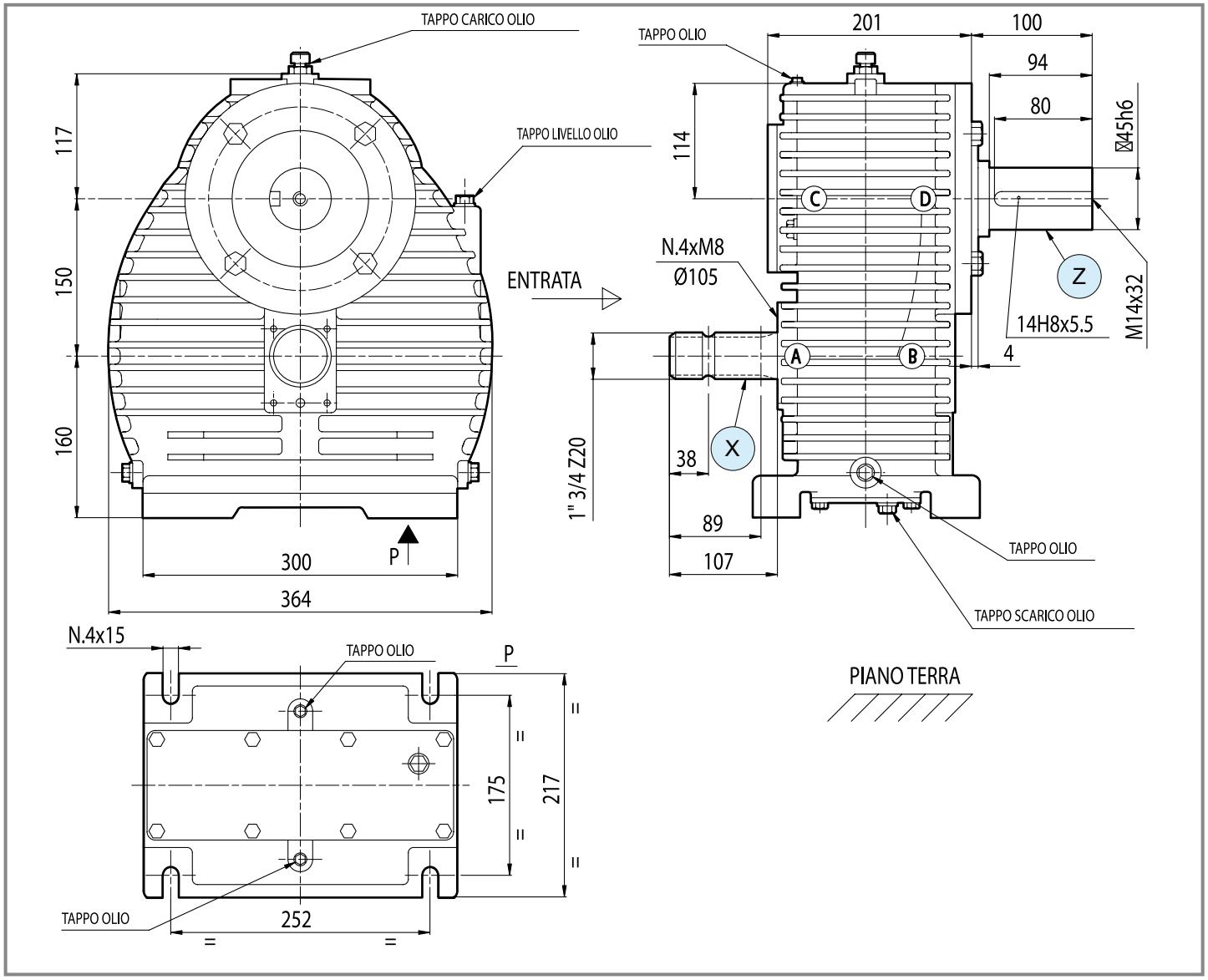

	i	N_1 [rpm]	P_1 [kW]	M_2 [Nm]	Shaft type X	Shaft type Y	Shaft type Z	Input	Features	Code	Mounting	
M	**3.80**	540	110.0	496	6 1" 3/4 Z20	-	21 L 94 ø 45	X	-	9.629.302	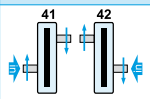	std
	1.77	1000	130.0	680	6 1" 3/4 Z20	-	22 L 64 ø 65	X	-	9.629.304	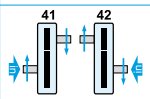	std

comer industries

A-623A

Code **623**

(0.02)

[kg] 6 | [l] -

Per configurazioni non a catalogo contattare Servizio Tecnico-Commerciale
For non-catalog configurations contact Technical-Commercial Service

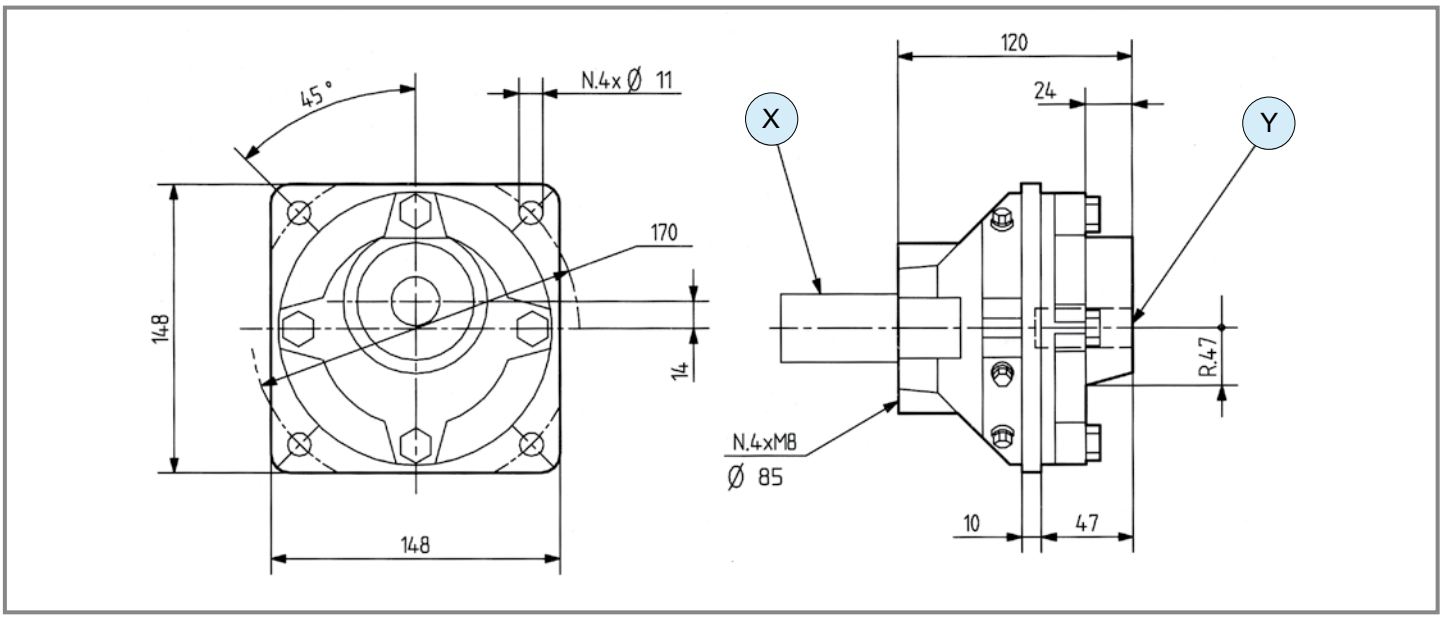

	i	N_1 [rpm]	P_1 [kW]	M_2 [Nm]	Shaft type X	Shaft type Y	Shaft type Z	Input	Features	Code	Mounting	
M	**1.60**	540	11.0	118	1 1" 3/8 Z6	1 1" 3/8 Z6	-	X	-	9.623.000	217	std
R	**1.60**	540	7.4	203	1 1" 3/8 Z6	1 1" 3/8 Z6	-	Y	-	9.623.000	215	std

A-20A

Code **620**

(0.02)

[kg] 26 | [l] 1.4

Per configurazioni non a catalogo contattare Servizio Tecnico-Commerciale
For non-catalog configurations contact Technical-Commercial Service

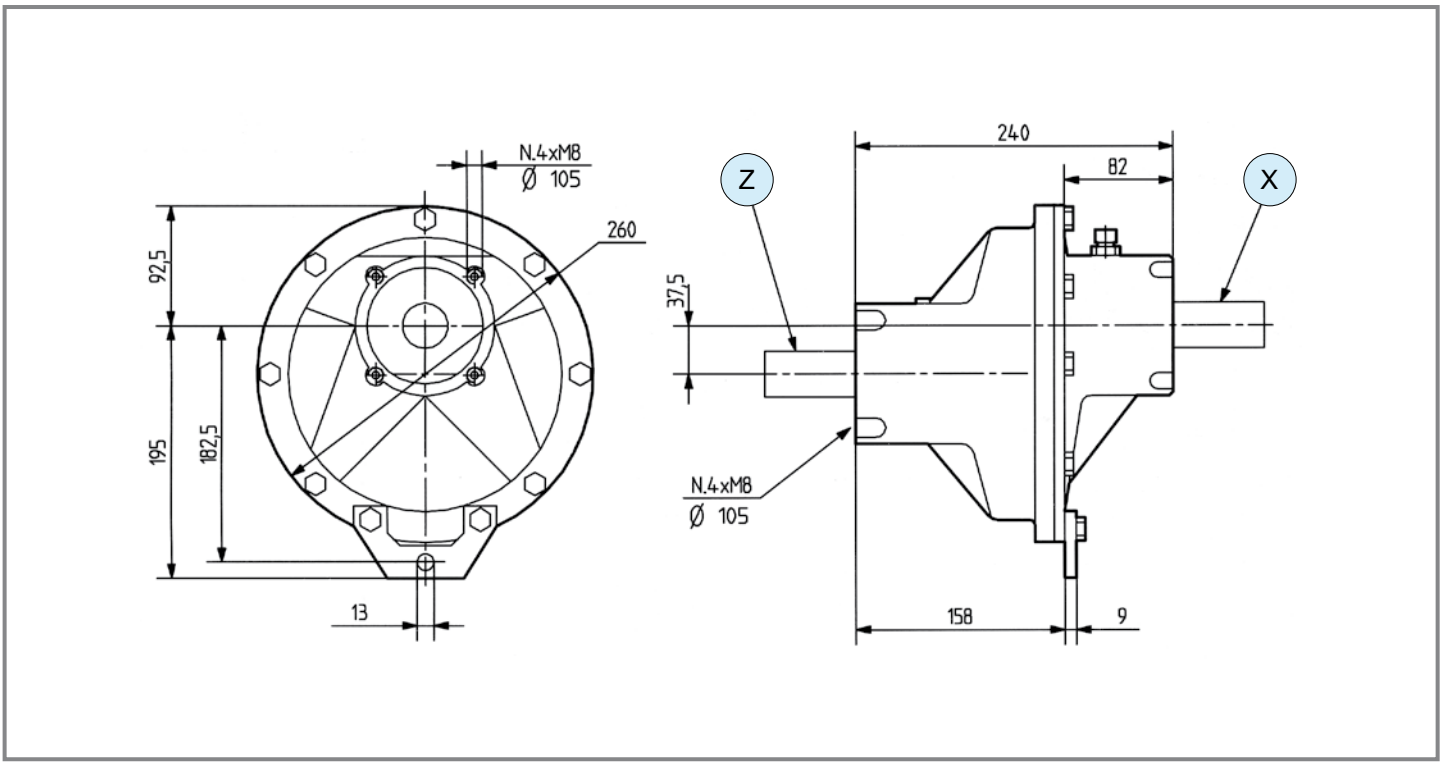

	i	N_1 [rpm]	P_1 [kW]	M_2 [Nm]	Shaft type X	Shaft type Y	Shaft type Z	Input	Features	Code	Mounting	
M	**1.88**	540	55	502	2 1" 3/8 Z21	-	1 1" 3/8 Z6	X	-	9.620.001	217	std
R	**1.88**	1000	55	958	2 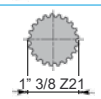 1" 3/8 Z21	-	1 1" 3/8 Z6	X	-	9.620.000	215 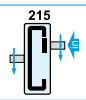	std
	1.88	1000	55	958	1 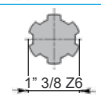 1" 3/8 Z6	-	1 1" 3/8 Z6	X	-	9.620.002	215	std

comer industries

A-16A

Code **615**

(0.02)

[kg] 40 | [l] 1.5

Per configurazioni non a catalogo contattare Servizio Tecnico-Commerciale
For non-catalog configurations contact Technical-Commercial Service

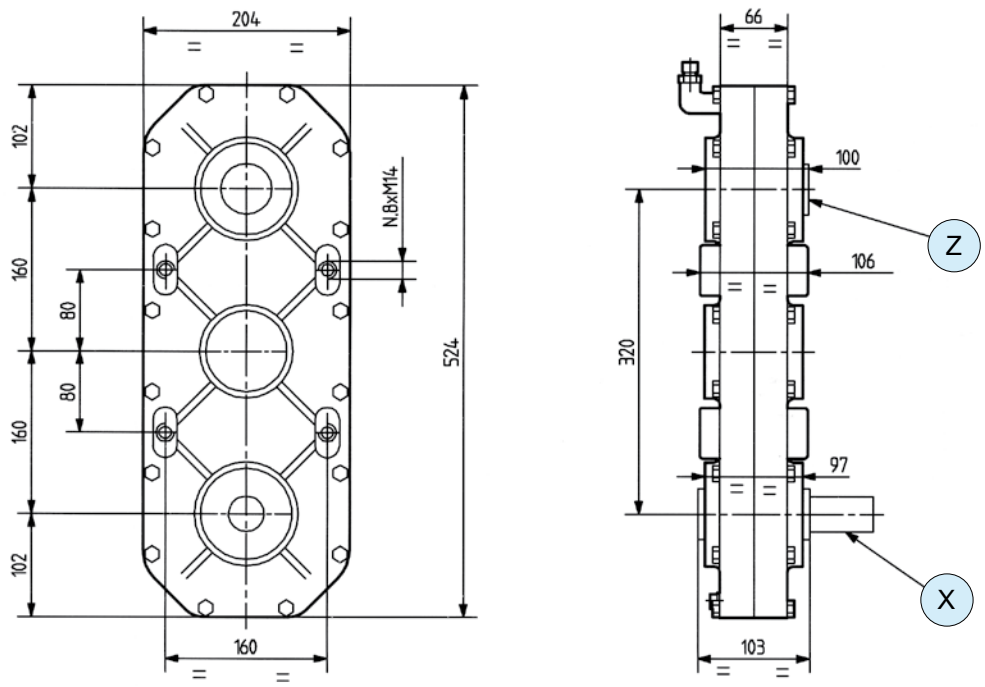

	i	N_1 [rpm]	P_1 [kW]	M_2 [Nm]	Shaft type X	Shaft type Y	Shaft type Z	Input	Features	Code	Mounting	
-	**1.00**	540	62.6	1074	1 1" 3/8 Z6	-	59 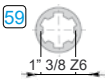 1" 3/8 Z6	X	-	9.615.000	214	std
	1.00	540	62.6	1074	1 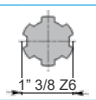 1" 3/8 Z6	-	59 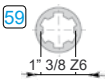 1" 3/8 Z6	Z	-	9.615.001	214	std

APPLICAZIONI - *APPLICATION*

Applicazioni *Applications*		p.
Trinciastocchi *Flail Mowers*	(1.01)	66
Falciadistruggierba *Rotary Mowers*	(1.02)	86
Decespugliatori *Rotary Cutters*	(1.03)	
Spandiletame *Manure Spreaders*	(1.04)	104
Decespugliatori idraulici *Hydraulic Cutters*	(1.05)	108
Zappatrici - Fresatrici *Rotary Tillers*	(2.01)	112
Zappatrici multiple *Multiple Rotary Tillers*	(2.02)	
Erpici rotanti *Rotary Harrows*	(2.03)	
Trivelle *Post Hole Diggers*	(2.04)	146
Atomizzatori *Sprayers*	(3.01)	154
Spandiconcime *Fertilizer Spreaders*	(3.02)	164
Pompe centrifughe per irrigazione *Centrifugal Pumps for Irrigation*	(3.03)	170
Irrigatori a bobina *Irrigation Reels*	(3.04)	

APPLICAZIONI - *APPLICATION*

Applicazioni *Applications*		p.
Falciatrici rotative *Cutter Bars*	 (4.01)	182
Giroandanatori *Rotary Rakes*	 (4.02)	194
Spandifieno rotativi *Rotary Tedders*	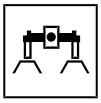 (4.05)	
Presse raccoglitrici *Round Balers*	 (4.04)	210
Carri miscelatori *Feed Mixer Machines*	 (4.06)	216
Lancia paglia *Straw Blower*	 (4.09)	
Punte da mais *Corn Headers*	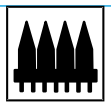 (4.08)	238
Gruppi per testate da grano e girasole *Grain Header and Sunflower Headers*	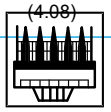 (4.10)	244
Gruppi eletrogeni *P.T.O. Generators*	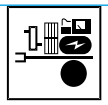 (5.01)	250
Seghe circolari - a nastro *Circular Saws - Belt Saws*	 (5.02)	
Cinematismi per mietitrebbie *Combine Harvester Solution*	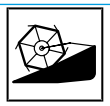 (6.01)	264
Cinematismi per trincia semoventi *Forage Harvester Driveline Solution*	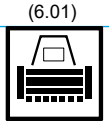 (6.02)	
Cinematismi per macchine semoventi *Self-propelled Windrower Solution*	 (6.03)	

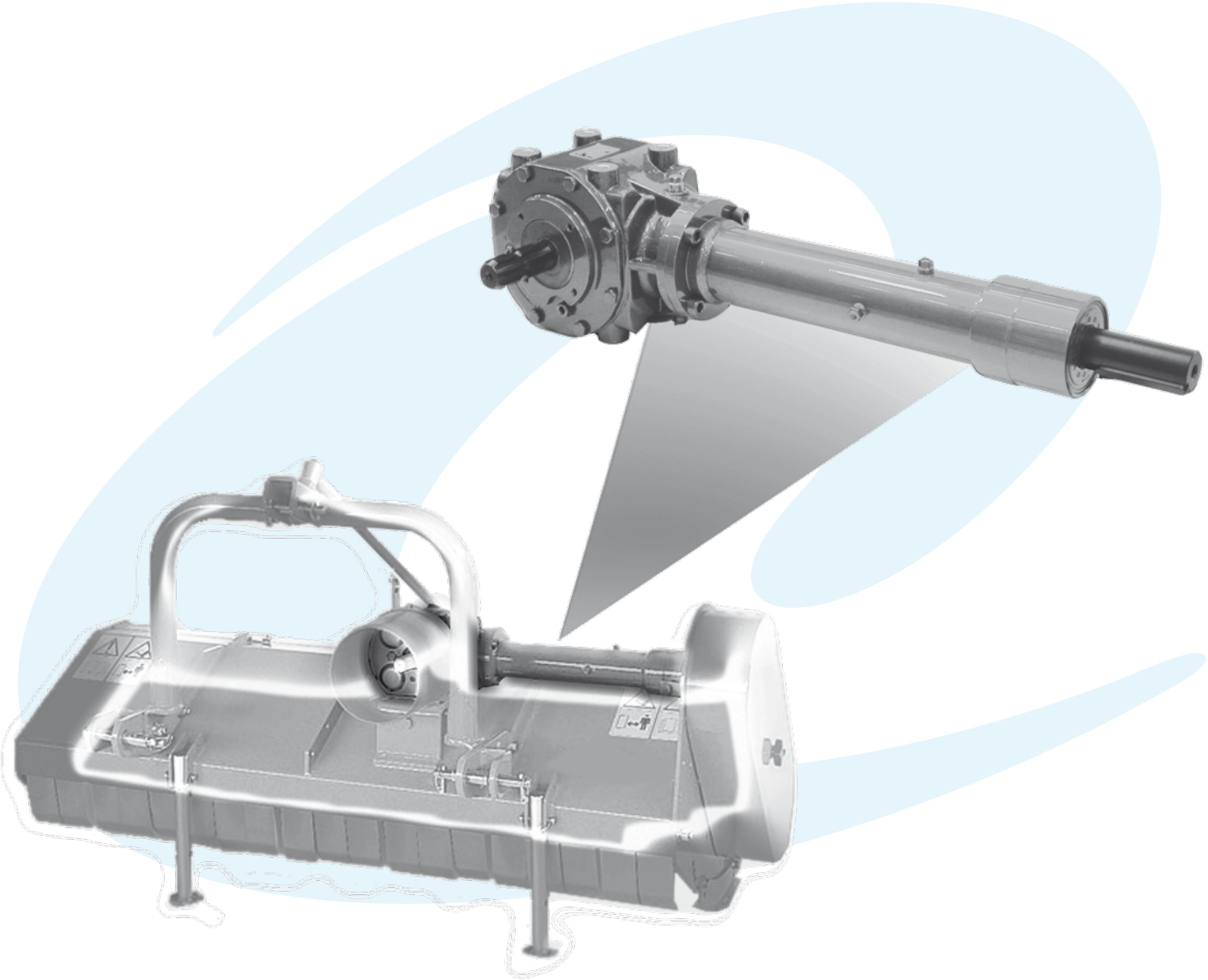

	i	$P_{1\text{ - max}}$ [kW]	$M_{2\text{ - max}}$ [Nm]	Tipologia alberi disponibili *Available type of shafts*	p.
L-5A	M 3.00 - - R -	5.1	29		68
LL-5L	M 1.9 - - R -	11	99		69
L-25J **L25A**	M 1.90 ÷3.00 - - R -	11	99		70
TL-281E	M 3.00 - - R -	14.7	136		71
TL-310J **TL-310A**	M 3.00 - - R -	22.1	126		72
TL-311J **TL-311A**	M 3.00 - - R -	36.8	210		74
TL-312A	M 1.60 ÷3.00 - - R -	76.5	443		76
TL-290A	M 1.60 ÷3.00 - - R 2.07	91.1	1828		78
T-313J	M 3.00 - - R -	45.6	261		80
TL-292B	M 1.62 ÷1.86 - 1.00 R -	62.5	1059		81
T-269B	M 1.63 ÷1.93 - 1.00 R	77.3	1261		82
T-301B	M 1.35 ÷1.93 - 1.00 R	184	1790		83
T-331A	M 1.35 ÷1.92 - 1.00 R	264.7	2451		84

L-5A

Code **104**

(1.01)

[kg]	8	[l]	0.4

Per configurazioni non a catalogo contattare Servizio Tecnico-Commerciale
For non-catalog configurations contact Technical-Commercial Service

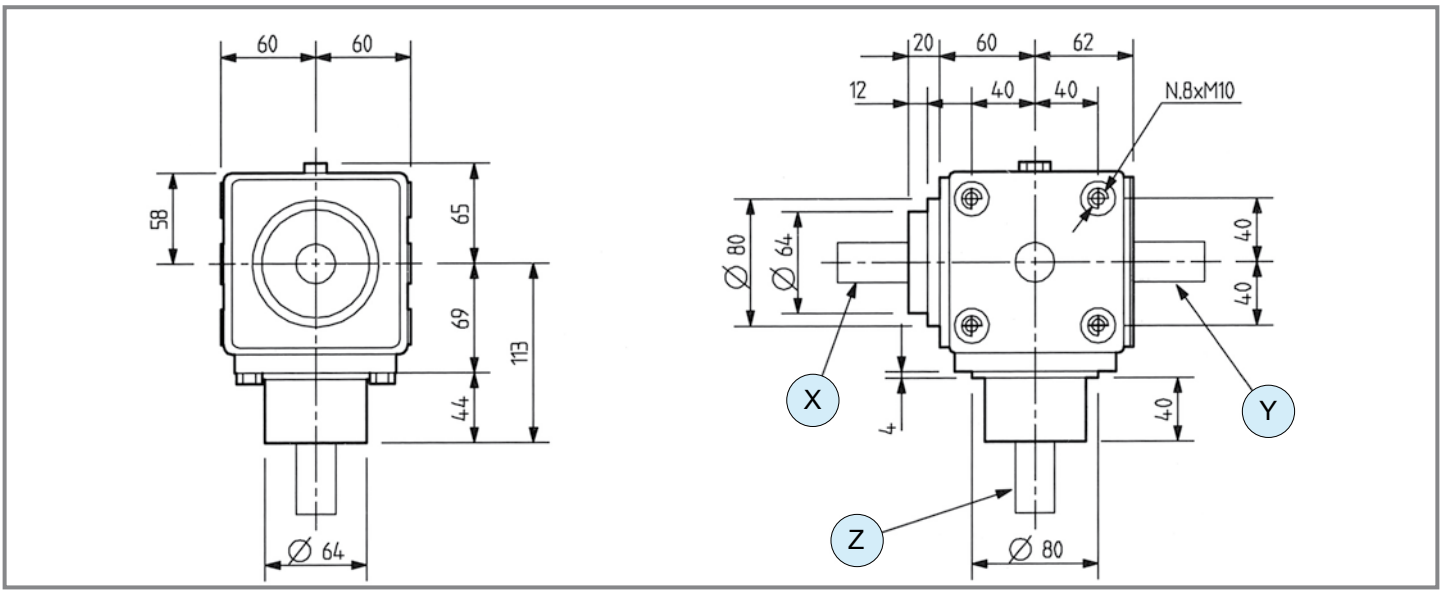

	i	N_1 [rpm]	P_1 [kW]	M_2 [Nm]	Shaft type X	Shaft type Y	Shaft type Z	Input	Features	Lenght	Code	Mounting	
					1 - Ruota libera / *Free wheel*								
M	**3.00**	540	5.1	29	16 L 50 ø 22	-	16 L 70 ø 22	X	1 ccw	-	9.104.628	21 22	std
	3.00	540	5.1	29	16 L 50 ø 22	-	16 L 70 ø 22	X	1 ccw	-	9.104.630	23 24	std
	3.00	540	5.1	29	12 L 52 ø 25	-	12 L 57 ø 25	X	1 ccw	-	9.104.648	23 24	std
	2.78	540	5.1	31	12 L 60 ø 25	12 L 58 ø 25	1 1" 3/8 Z6	X	-	-	9.104.037	21 22	std

comer industries

LL-5L

Code **104**

(1.01)

[kg] 15 | [l] 0.7

Per configurazioni non a catalogo contattare Servizio Tecnico-Commerciale
For non-catalog configurations contact Technical-Commercial Service

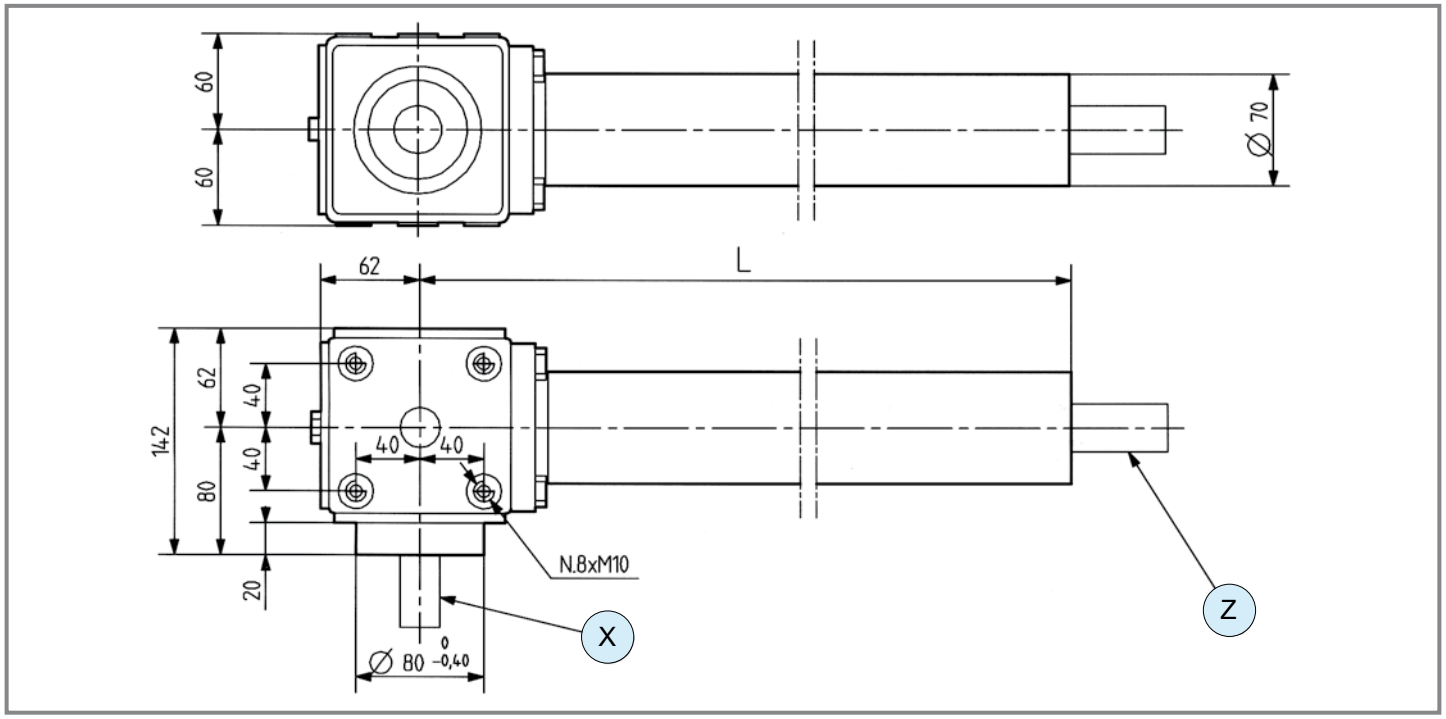

	i	N_1 [rpm]	P_1 [kW]	M_2 [Nm]	Shaft type X	Shaft type Y	Shaft type Z	Input	Features	Lenght	Code	Mounting	
	1 - Ruota libera / *Free wheel*												
M	**1.90**	540	11	99	1 1" 3/8 Z6	-	12 L 60 ø 25	X	-	530	9.104.419	21 22	std
	1.90	540	11	99	1 1" 3/8 Z6	-	12 L 60 ø 25	X	1 ccw	615	9.104.647	21 22	std

L-25J | L-25A

Code **124.8** | Code **124**

(1.01)

[kg] 4.1 | [l] 0.4

Per configurazioni non a catalogo contattare Servizio Tecnico-Commerciale
For non-catalog configurations contact Technical-Commercial Service

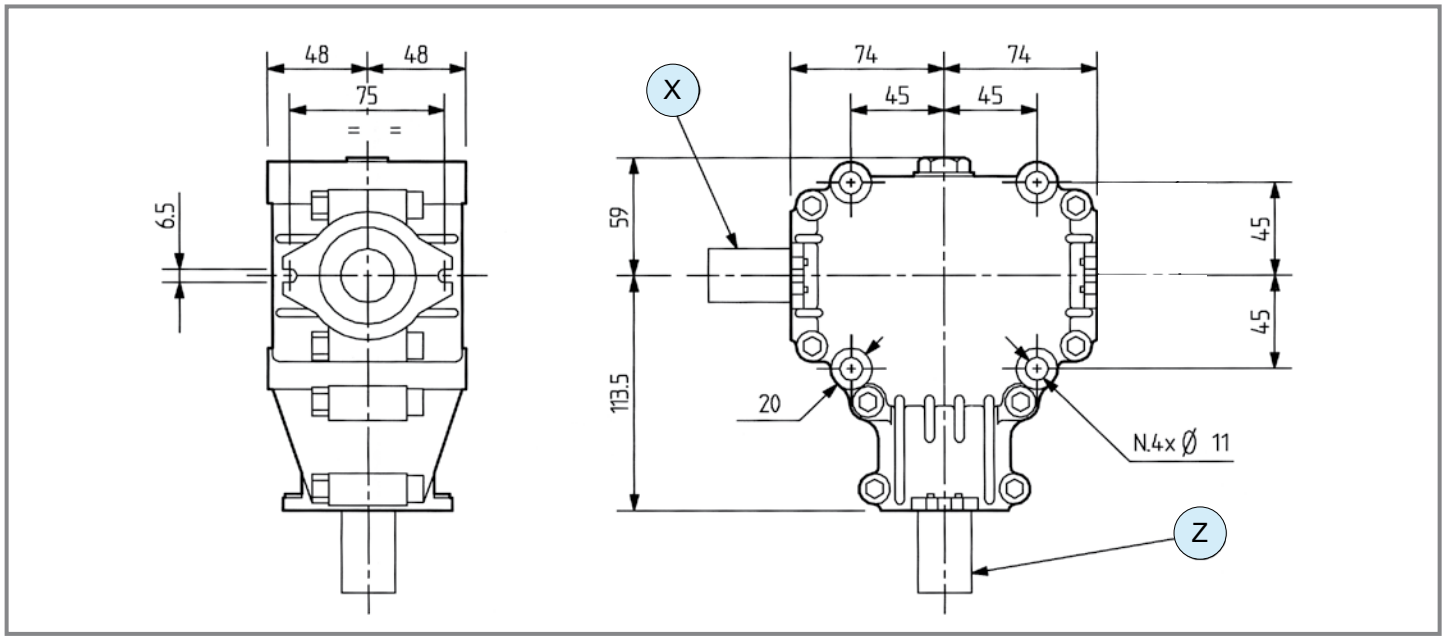

	i	N_1 [rpm]	P_1 [kW]	M_2 [Nm]	Shaft type X	Shaft type Y	Shaft type Z	Input	Features	Lenght	Code	Mounting	
	1 - Ruota libera / *Free wheel*												
M	**3.00**	540	5.0	29	12 L 52 ø 25	-	12 L 56.5 ø 25	X	1 ccw	-	9.124.654	21 22	std
	3.00	540	5.0	29	12 L 52 ø 25	-	12 L 56.5 ø 25	X	1 ccw	-	9.124.686	23 24	std
	3.00	540	5.0	29	1 1" 3/8 Z6	-	16 L 69.5 ø 22	X	1 ccw	-	9.124.878	21 22	std
	3.00	540	5.0	29	1 1" 3/8 Z6	-	16 L 69.5 ø 22	X	1 ccw	-	9.124.879	23 24	std
	3.00	540	5.0	29	12 L 52 ø 25	-	12 L 56.5 ø 25	X	1 ccw	-	9.124.883	23 24	std
	3.00	540	11.0	63	1 1" 3/8 Z6	-	12 L 69.5 ø 25	X	1 ccw	-	9.124.895	21 22	std
	1.90	540	11.0	99	1 1" 3/8 Z6	-	12 L 72 ø 25	X	1 ccw	-	9.124.462	23 24	std

comer industries

TL-281E

Code **281**

(1.01)

[kg] - | [l] -

Per configurazioni non a catalogo contattare Servizio Tecnico-Commerciale
For non-catalog configurations contact Technical-Commercial Service

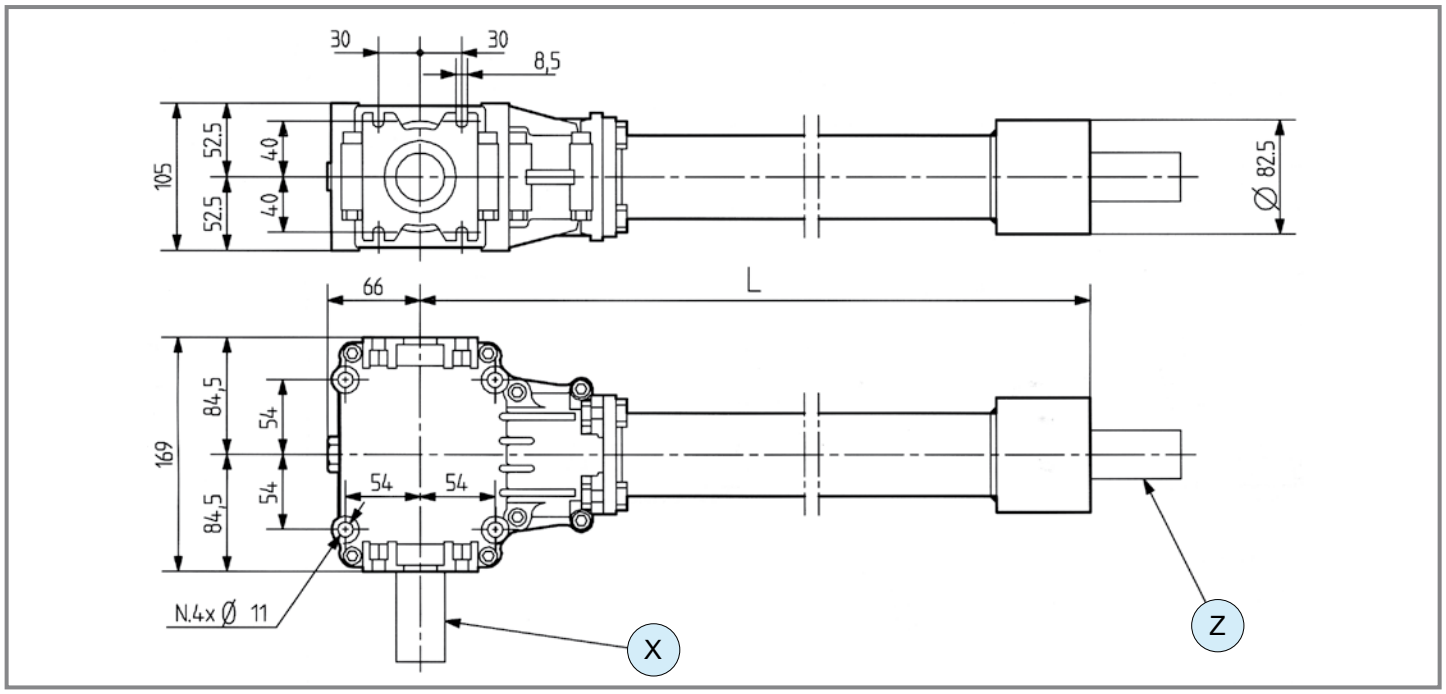

	i	N_1 [rpm]	P_1 [kW]	M_2 [Nm]	Shaft type X	Shaft type Y	Shaft type Z	Input	Features	Lenght	Code	Mounting	
					1 - Ruota libera / *Free wheel*								
M	**2.91**	540	8.1	48	1 — 1" 3/8 Z6	-	18 — ø 30 — L 60	X	1 ccw	-	9.281.321	21 22	std
	2.91	540	9.6	57	1 — 1" 3/8 Z6	-	12 — ø 25 — L 59	X	-	530	9.281.045	21 22	std
	2.91	540	9.6	57	1 — 1" 3/8 Z6	-	12 — ø 25 — L 59	X	-	715	9.281.047	21 22	std
	2.91	540	9.6	57	1 — 1" 3/8 Z6	-	12 — ø 25 — L 59	X	1 ccw	530	9.281.327	21 22	std
	2.91	540	9.6	57	1 — 1" 3/8 Z6	-	12 — ø 25 — L 59	X	1 ccw	715	9.281.326	21 22	std
	1.85	540	14.7	136	1 — 1" 3/8 Z6	-	12 — ø 25 — L 59	X	-	530	9.281.042	21 22	std

TL-310J | TL-310A

Code **310.8** | Code **310**

(1.01)

[kg]	18	[l]	0.8

Per configurazioni non a catalogo contattare Servizio Tecnico-Commerciale
For non-catalog configurations contact Technical-Commercial Service

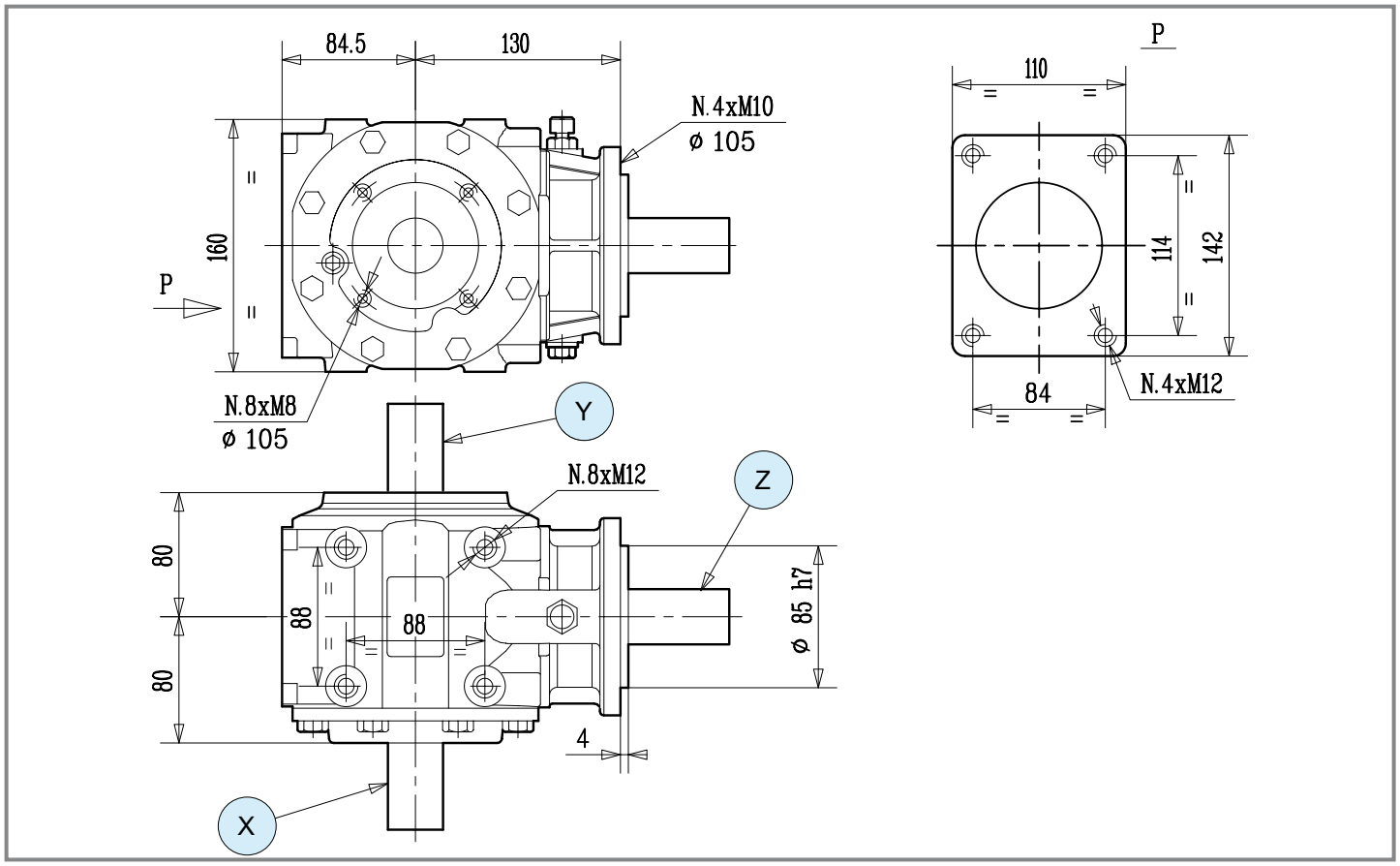

	i	N_1 [rpm]	P_1 [kW]	M_2 [Nm]	Shaft type X	Shaft type Y	Shaft type Z	Input	Features	Lenght [mm]	Code	Mounting	
					1 - Ruota libera / *Free wheel*								
M	**3.00**	540	22.1	126	1 — 1" 3/8 Z6	-	3 — L 85 — ø 35	X	1 ccw	615	9.310.050	21 22	std
	3.00	540	22.1	126	1 — 1" 3/8 Z6	-	3 — L 85 — ø 35	X	1 ccw	530	9.310.063	21 22	std
	3.00	540	22.1	126	1 — 1" 3/8 Z6	1 — 1" 3/8 Z6	14 — L 58 — ø 33	X	1 ccw	-	9.310.870	27 28	std
	3.00	540	22.1	126	1 — 1" 3/8 Z6	-	14 — L 58 — ø 33	X	1 ccw	-	9.310.875	21 22	std
	3.00	540	22.1	126	1 — 1" 3/8 Z6	-	14 — L 58 — ø 33	X	1 ccw	-	9.310.876	23 24	std

comer industries

Prolunghe / Extensions TL-310D

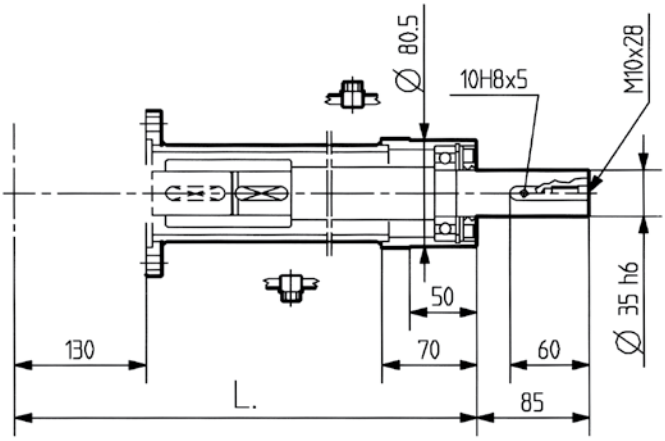

Lunghezze prolunghe Extensions lenghts [mm]	Code
430	9.310.500
530	9.310.502
615	9.310.501
715	9.310.503
780	9.310.514
850	9.310.513
994	9.310.517

TL-311J | TL-311A

Code **311.8** | Code **311**

(1.01)

[kg] 23.5 | [l] 1.2

Per configurazioni non a catalogo contattare Servizio Tecnico-Commerciale
For non-catalog configurations contact Technical-Commercial Service

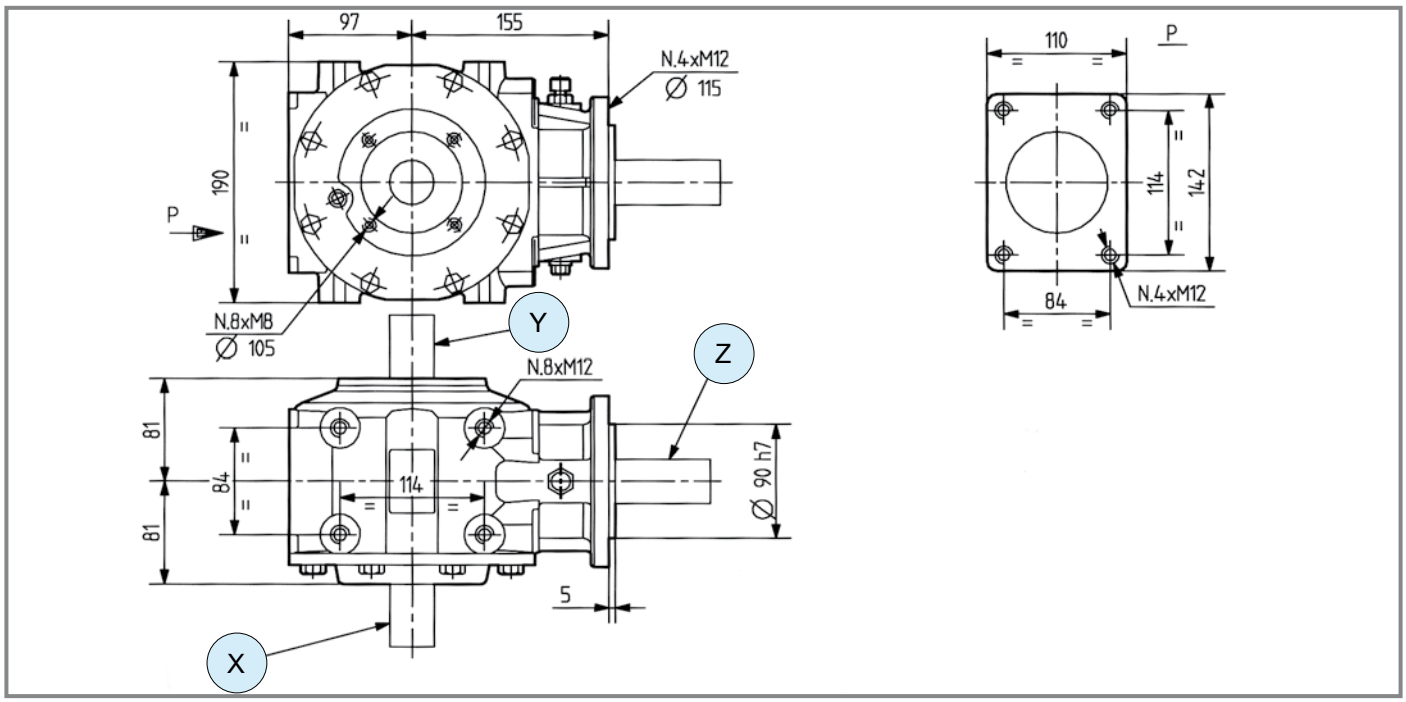

1 - Ruota libera / *Free wheel* 2 - Doppia ruota libera / Double *free wheel*

	i	N_1 [rpm]	P_1 [kW]	M_2 [Nm]	Shaft type X	Shaft type Y	Shaft type Z	Input	Features	Lenght [mm]	Code	Mounting	
	3.00	540	36.8	210	1 — 1" 3/8 Z6	-	4 — L 106 — ø 40	X	1 ccw	950	9.311.083	21 22	std
	3.00	540	36.8	210	1 — 1" 3/8 Z6	-	4 — L 106 — ø 40	X	1 ccw	780	9.311.075	21 22	std
	3.00	540	36.8	210	1 — 1" 3/8 Z6	-	4 — L 106 — ø 40	X	1 ccw	615	9.311.093	21 22	std
	3.00	540	36.8	210	1 — 1" 3/8 Z6	1 — 1" 3/8 Z6	14 — L 77 — ø 33	X	2 ccw	-	9.311.645	36	std
	3.00	540	36.8	210	1 — 1" 3/8 Z6	-	14 — L 77 — ø 33	X	1 ccw	-	9.311.614	21 22	std
M	**3.00**	540	36.8	210	1 — 1" 3/8 Z6	1 — 1" 3/8 Z6	14 — L 77 — ø 33	X	1 ccw	-	9.311.615	27 28	std
	3.00	540	36.8	210	1 — 1" 3/8 Z6	-	14 — L 77 — ø 33	X	1 ccw	-	9.311.622	23 24	std
	3.00	540	36.8	210	1 — 1" 3/8 Z6	-	1 — 1" 3/8 Z6	X	1 ccw	-	9.311.670	21 22	std
	3.00	540	36.8	210	1 — 1" 3/8 Z6	-	14 — L 77 — ø 33	X	1 ccw	-	9.311.874	21 22	std
	3.00	540	36.8	210	1 — 1" 3/8 Z6	1 — 1" 3/8 Z6	14 — L 77 — ø 33	X	1 ccw	-	9.311.875	27 28	std
	3.00	540	36.8	210	1 — 1" 3/8 Z6	-	14 — L 77 — ø 33	X	1 ccw	-	9.311.885	23 24	std

comer industries

Prolunghe / Extensions TL-311D

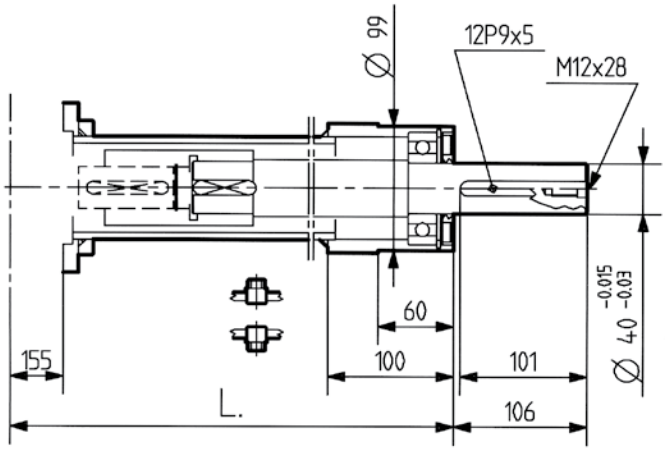

Lunghezze prolunghe Extensions lenghts [mm]	Code	Code Reinforced
500	9.312.505	-
615	9.312.500	-
700	9.312.527	-
780	9.312.503	9.311.533
950	9.312.515	-
1060	9.312.502	-
1200	9.312.508	9.311.538
1350	9.312.507	9.311.537

TL-312A

Code **312**

(1.01)

[kg] 27 | [l] 1.5

Per configurazioni non a catalogo contattare Servizio Tecnico-Commerciale
For non-catalog configurations contact Technical-Commercial Service

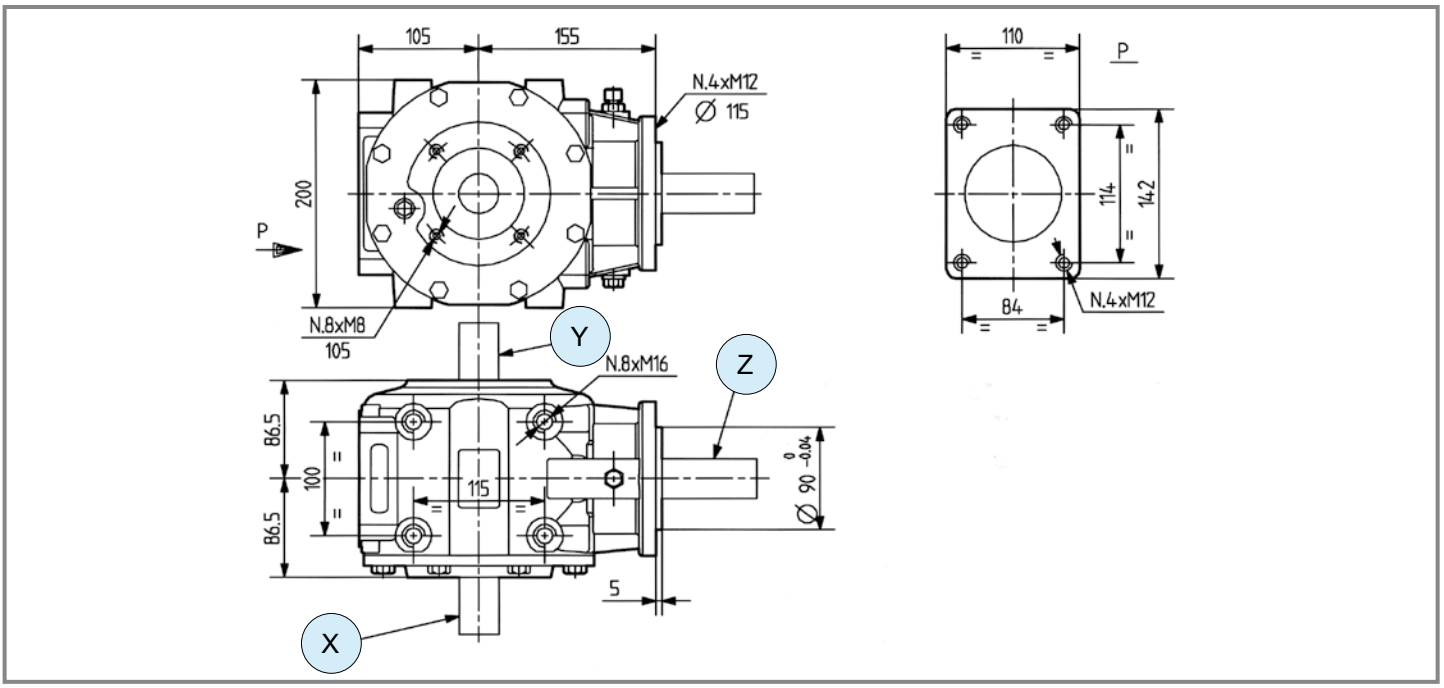

1 - Ruota libera / *Free wheel* 2 - Doppia ruota libera / Double *free wheel*

	i	N_1 [rpm]	P_1 [kW]	M_2 [Nm]	Shaft type X	Shaft type Y	Shaft type Z	Input	Features	Lenght [mm]	Code	Mounting	
	3.00	540	45.6	261	1 — 1" 3/8 Z6	-	4 — L 106 — ø 40	X	1 ccw	1200	9.312.386	21 22	std
	3.00	540	45.6	261	1 — 1" 3/8 Z6	1 — 1" 3/8 Z6	4 — L 106 — ø 40	Y	1 ccw	1200	9.312.328	27 28	std
	3.00	540	45.6	261	1 — 1" 3/8 Z6	1 — 1" 3/8 Z6	4 — L 106 — ø 40	X	1 ccw	950	9.312.327	27 28	std
	3.00	540	45.6	261	1 — 1" 3/8 Z6	-	4 — L 106 — ø 40	X	1 ccw	780	9.312.094	21 22	std
	3.00	540	45.6	261	1 — 1" 3/8 Z6	-	14 — L 77 — ø 33	X	1 ccw	-	9.312.756	21 22	std
M	**3.00**	540	45.6	261	1 — 1" 3/8 Z6	-	4 — L 85.5 — ø 40	X	1 ccw	-	9.312.762	21 22	std
	3.00	540	45.6	261	1 — 1" 3/8 Z6	-	14 — L 77 — ø 33	X	1 ccw	-	9.312.661	23 24	std
	3.00	540	45.6	261	1 — 1" 3/8 Z6	1 — 1" 3/8 Z6	14 — L 77 — ø 33	X	2 ccw	-	9.312.795	36	std
	3.00	540	45.6	261	1 — 1" 3/8 Z6	1 — 1" 3/8 Z6	4 — L 85.5 — ø 40	X	-	-	9.312.099	27 28	std
	1.93	540	53.7	477	1 — 1" 3/8 Z6	1 — 1" 3/8 Z6	14 — L 77 — ø 33	X	2 ccw	-	9.312.796	36	std
	1.60	1000	76.5	443	1 — 1" 3/8 Z6	-	14 — L 77 — ø 33	X	1 ccw	-	9.312.754	21 22	std

TL-312A

Code **312**

(1.01)

1 - Ruota libera / *Free wheel* 2 - Doppia ruota libera / Double *free wheel*

	i	N_1 [rpm]	P_1 [kW]	M_2 [Nm]	Shaft type X	Shaft type Y	Shaft type Z	Input	Features	Lenght [mm]	Code	Mounting	
	1,60	1000	76,5	443	1 1" 3/8 Z6	1 1" 3/8 Z6	14 L 77 ø 33	X	1 ccw	-	9.312.673	23 23 24	std
	1,60	1000	76,5	443	1 1" 3/8 Z6	1 1" 3/8 Z6	14 L 77 ø 33	X	1 ccw	-	9.312.686	21 22	std
M	**1.60**	1000	76.5	443	1 1" 3/8 Z6	1 1" 3/8 Z6	14 L 77 ø 33	X	2 ccw	-	9.312.797	36	std
	1.60	1000	76.5	443	1 1" 3/8 Z6	1 1" 3/8 Z6	14 L 77 ø 33	X	1 ccw	-	9.312.755	27 28	std
	1,60	1000	76,5	443	1 1" 3/8 Z6	1 1" 3/8 Z6	14 L 77 ø 33	X	1 ccw	-	9.312.632	23 24	std

Prolunghe / Extensions TL-312D

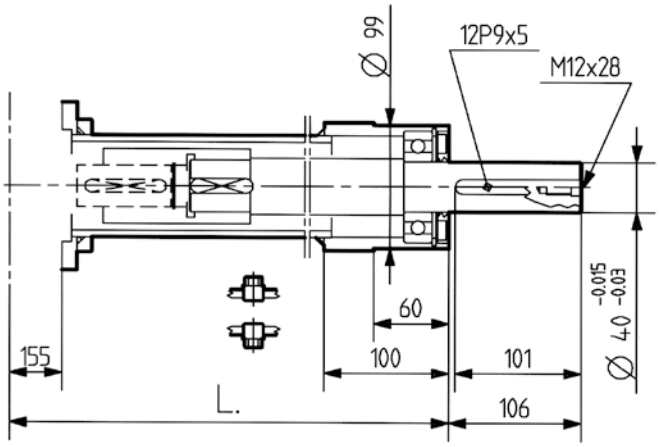

Lunghezze prolunghe Extensions lenghts [mm]	Code	Code Reinforced
500	9.312.505	-
615	9.312.500	-
700	9.312.527	-
780	9.312.503	9.311.533
950	9.312.515	-
1060	9.312.502	-
1200	9.312.508	9.311.538
1350	9.312.507	9.311.537

TL-290A

Code **290**

(1.01)

[kg] 23.5 | [l] 1.7

Per configurazioni non a catalogo contattare Servizio Tecnico-Commerciale
For non-catalog configurations contact Technical-Commercial Service

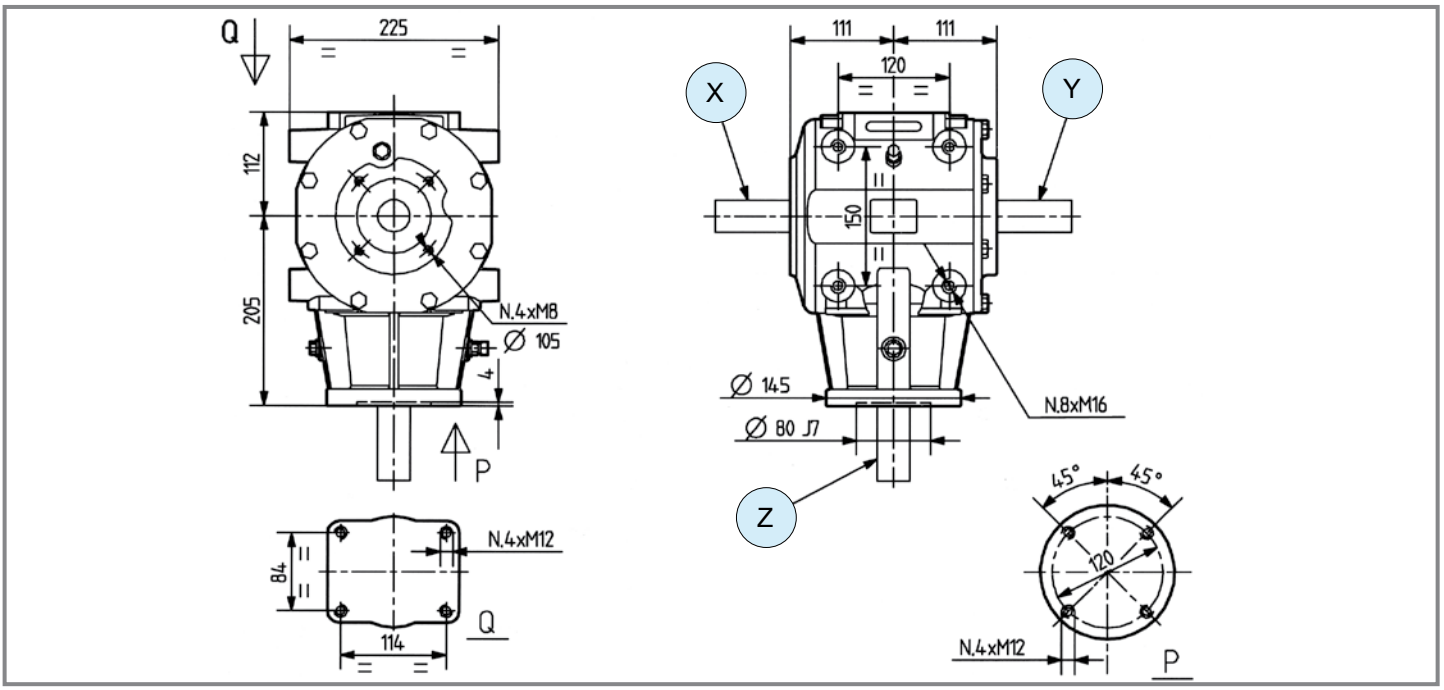

1 - Ruota libera / *Free wheel* 2 - Doppia ruota libera / Double *free wheel*

	i	N_1 [rpm]	P_1 [kW]	M_2 [Nm]	Shaft type X	Shaft type Y	Shaft type Z	Input	Features	Lenght [mm]	Code	Mounting	
	3.00	540	57.3	328	1 — 1" 3/8 Z6	1 — 1" 3/8 Z6	4 — L 82 — ø 40	Y	2 ccw	-	9.290.764	36	std
	3.00	540	57.3	328	1 — 1" 3/8 Z6	-	1 — 1" 3/8 Z6	X	1 ccw	-	9.290.600	21 22	std
	3.00	1000	78.7	243	1 — 1" 3/8 Z6	-	4 — L 82 — ø 40	X	1 ccw	-	9.290.609	23 24	std
	3.00	1000	79.0	244	5 — 1" 3/4 Z6	-	4 — L 120 — ø 40	X	1 ccw	-	9.290.610	21 22	std
	3.00	540	57.3	328	5 — 1" 3/4 Z6	-	5 — 1" 3/4 Z6	X	1 ccw	-	9.290.628	21 22	std
M	**3.00**	540	62.3	356	1 — 1" 3/8 Z6	-	4 — L 82 — ø 40	X	1 ccw	-	9.290.639	23 24	std
	3.00	540	57.3	328	1 — 1" 3/8 Z6	-	4 — L 82 — ø 40	X	1 ccw	-	9.290.762	21 22	std
	3.00	540	57.3	328	1 — 1" 3/8 Z6	-	4 — L 82 — ø 40	X	1 ccw	-	9.290.756	21 22	std
	3.00	540	58.8	336	1 — 1" 3/8 Z6	1 — 1" 3/8 Z6	4 — L 82 — ø 40	Y	1 ccw	-	9.290.738	27 28	std
	2.42	540	58.8	417	1 — 1" 3/8 Z6	1 — 1" 3/8 Z6	4 — L 82 — ø 40	Y	1 ccw	-	9.290.755	27 28	std

TL-290A

Code **290**

(1.01)

1 - Ruota libera / *Free wheel* 2 - Doppia ruota libera / Double *free wheel*

	i	N_1 [rpm]	P_1 [kW]	M_2 [Nm]	Shaft type X	Shaft type Y	Shaft type Z	Input	Features	Lenght [mm]	Code	Mounting	
	2.07	540	57.3	475	7 36x40 DIN5482	7 36x40 DIN5482	1 1" 3/8 Z6	X	1 ccw	-	9.290.606	25 26	std
	1.86	540	62.5	576	1 1" 3/8 Z6	1 1" 3/8 Z6	4 L 82 ø 40	X	2 ccw	-	9.290.775	36	std
	1.86	540	62.5	576	1 1" 3/8 Z6	-	4 L 82 ø 40	X	1 ccw	-	9.290.759	21 22	std
	1.60	1000	91.1	527	1 1" 3/8 Z6	1 1" 3/8 Z6	4 L 82 ø 40	X	1 ccw	-	9.290.763	27 28	std
M	**1.60**	1000	91.1	527	1 1" 3/8 Z6	1 1" 3/8 Z6	4 L 82 ø 40	Y	1 ccw	-	9.290.737	27 28	std
	1.60	1000	91.1	527	5 1" 3/4 Z6	5 1" 3/4 Z6	4 L 82 ø 40	Y	2 ccw	-	9.290.765	36	std
	1.60	1000	88.2	504	1 1" 3/8 Z6	-	21 L 118 ø 45	X	1 ccw	1560	9.290.084	35	std
	1.60	1000	91.2	528	-	1 1" 3/8 Z6	4 L 82 ø 40	Y	1 ccw	-	9.290.785	21 22	std
	1.60	540	66.2	710	1 1" 3/8 Z6	1 1" 3/8 Z6	4 L 82 ø 40	Y	2 ccw	-	9.290.790	36	std

Prolunghe / Extensions TL-290D

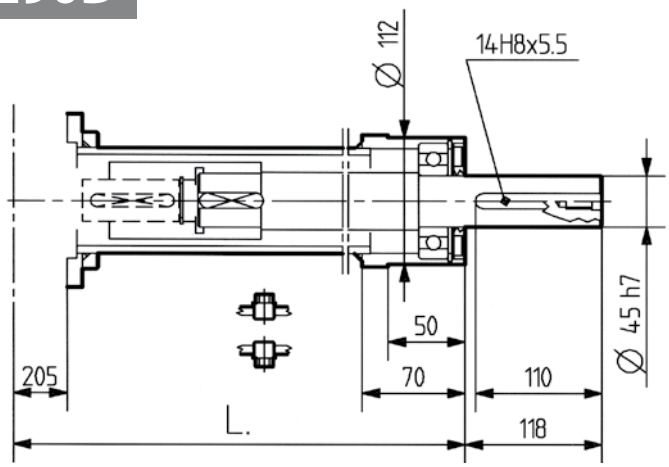

Lunghezze prolunghe Extensions lenghts [mm]	Code
780	9.290.500
990	9.290.501
1060	9.290.502
1115	9.290.527
1240	9.290.503
1400	9.290.505
1365	9.290.504
1560	9.290.507

T-313J

Code **313.8**

(1.01)

[kg]	27	[l]	1.5

Per configurazioni non a catalogo contattare Servizio Tecnico-Commerciale
For non-catalog configurations contact Technical-Commercial Service

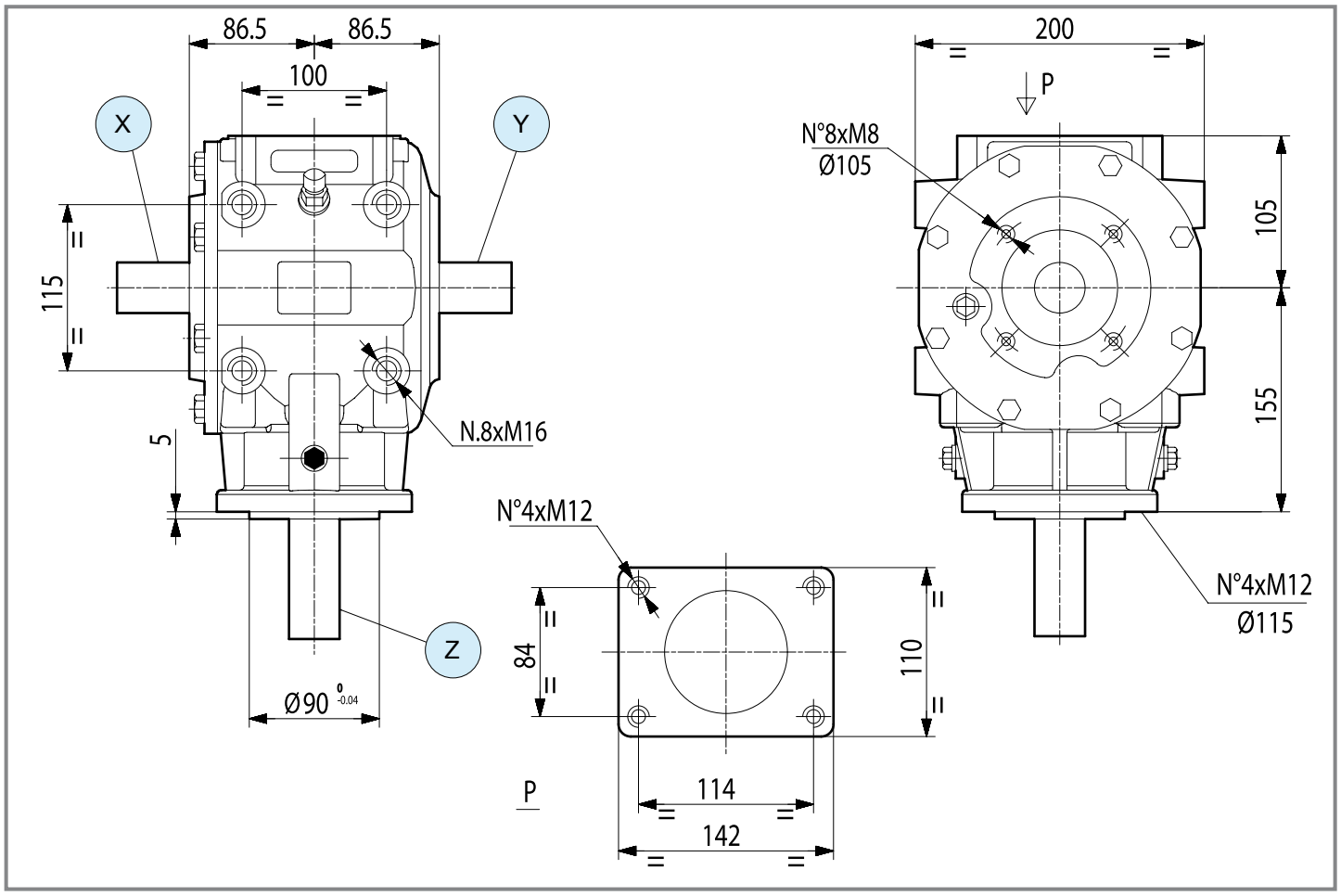

	i	N_1 [rpm]	P_1 [kW]	M_2 [Nm]	Shaft type X	Shaft type Y	Shaft type Z	Input	Features	Lenght [mm]	Code	Mounting	
	1 - Ruota libera / *Free wheel*												
M	**3.00**	540	45.6	261	1 — 1" 3/8 Z6	-	14 — L 77 — ø 33	X	1 ccw	-	9.313.875	21 22	std
	3.00	540	45.6	261	1 — 1" 3/8 Z6	1 — 1" 3/8 Z6	14 — L 83 — ø 33	X	1 ccw	-	9.313.870	27 28	std

comer industries

T-292B

Code **292**

(1.01)

[kg]	33

[l]	2.5

Per configurazioni non a catalogo contattare Servizio Tecnico-Commerciale
For non-catalog configurations contact Technical-Commercial Service

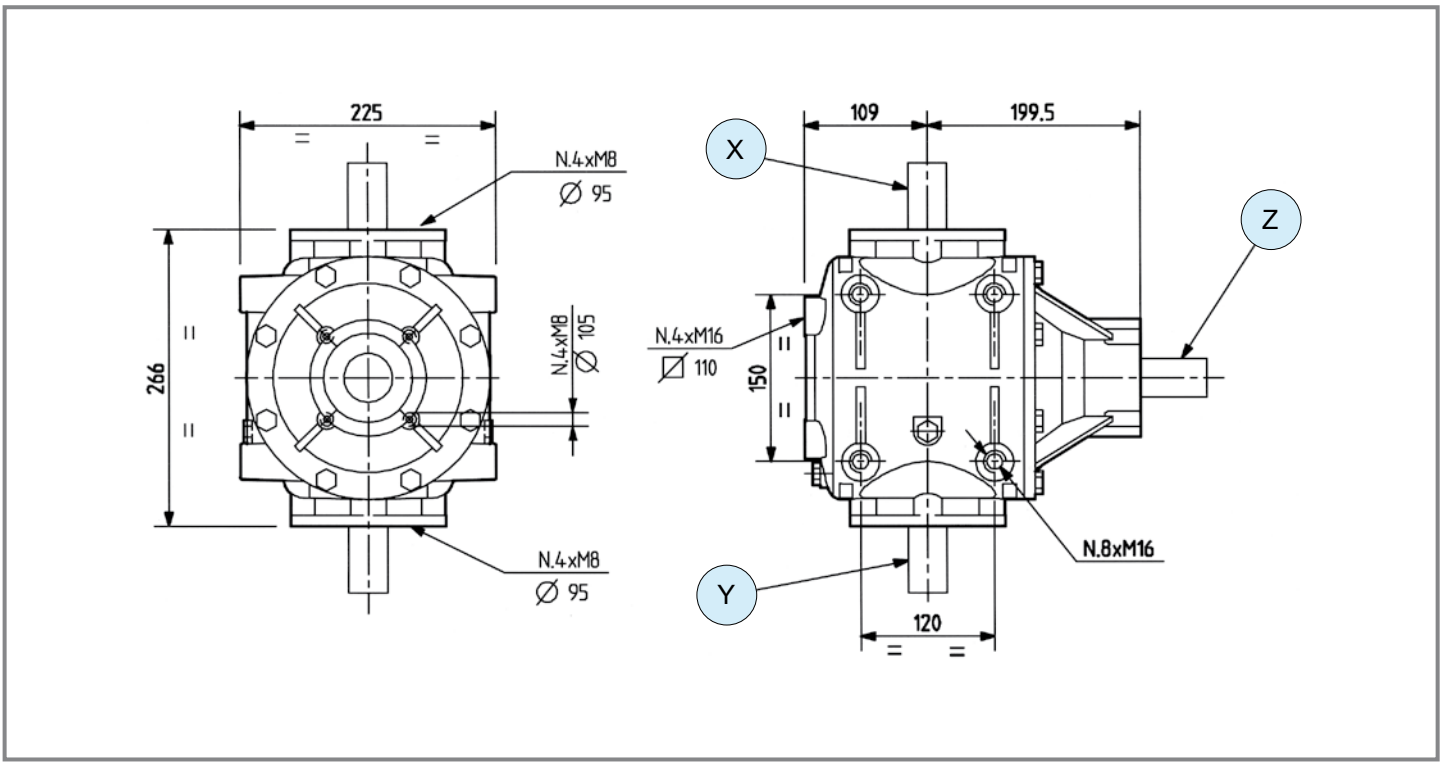

	i	N_1 [rpm]	P_1 [kW]	M_2 [Nm]	1 - Ruota libera / *Free wheel* Shaft type X	Y	Z	Input	Features	Lenght [mm]	Code	Mounting	
M +	**1.86**	540	58.9	542	1 1" 3/8 Z6	1 1" 3/8 Z6	1 1" 3/8 Z6	Z	1 ccw	-	9.292.205	33 34	std
M +	**1.62**	540	62.5	661	1 1" 3/8 Z6	1 1" 3/8 Z6	1 1" 3/8 Z6	Z	1 ccw	-	9.292.206	33 34	std
- =	**1.00**	540	61.8	1059	1 1" 3/8 Z6	1 1" 3/8 Z6	1 1" 3/8 Z6	Z	1 ccw	-	9.292.204	33 34	std

T-269B

Code **269**

(1.01)

[kg]	40	[l]	3.3

Per configurazioni non a catalogo contattare Servizio Tecnico-Commerciale
For non-catalog configurations contact Technical-Commercial Service

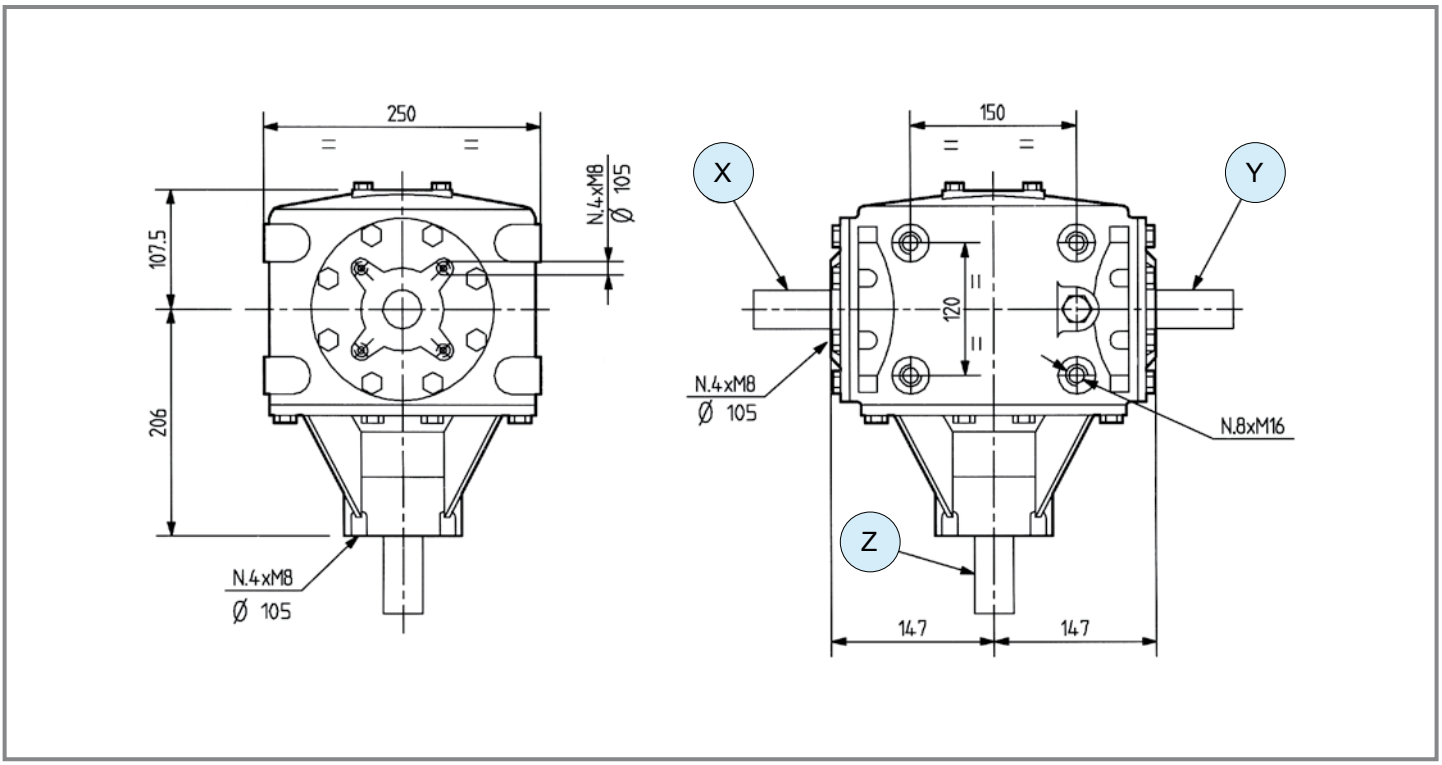

	i	N_1 [rpm]	P_1 [kW]	M_2 [Nm]	1 - Ruota libera / *Free wheel* Shaft type X	Y	Z	Input	Features	Lenght [mm]	Code	Mounting	
M	**1.93**	540	72.1	640	1 1" 3/8 Z6	1 1" 3/8 Z6	1 1" 3/8 Z6	Z	1 ccw	-	9.269.220	33 34	std
M	**1.63**	540	77.3	812	1 1" 3/8 Z6	1 1" 3/8 Z6	1 1" 3/8 Z6	Z	1 ccw	-	9.269.221	33 34	std
-	**1.00**	540	73.6	1261	1 1" 3/8 Z6	1 1" 3/8 Z6	1 1" 3/8 Z6	Z	1 ccw	-	9.269.219	33 34	std

T-301B

Code **301**

(1.01)

[kg] 61.5 | [l] 4.4

Per configurazioni non a catalogo contattare Servizio Tecnico-Commerciale
For non-catalog configurations contact Technical-Commercial Service

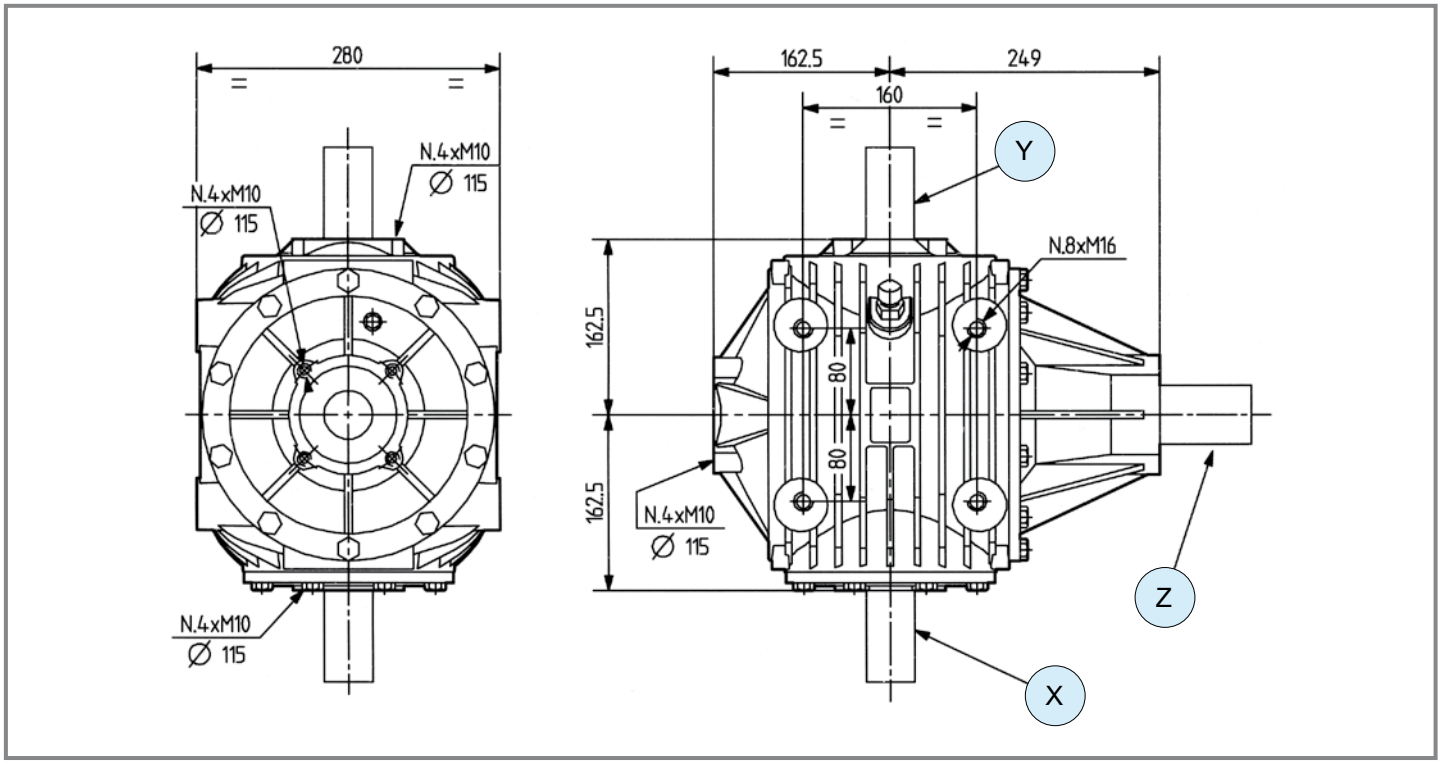

1 - Ruota libera / *Free wheel* 5 - Rinforzato / *Reinforced*

	i	N_1 [rpm]	P_1 [kW]	M_2 [Nm]	Shaft type X	Shaft type Y	Shaft type Z	Input	Features	Lenght [mm]	Code	Mounting	
M +	**1.93**	540	80.9	719	5 1" 3/4 Z6	5 1" 3/4 Z6	5 1" 3/4 Z6	Z	-	-	9.301.032	33 34	std
	1.93	540	80.9	719	1 1" 3/8 Z6	1 1" 3/8 Z6	5 1" 3/4 Z6	Z	1 ccw	-	9.301.045	33 34	std
	1.63	1000	110.3	638	5 1" 3/4 Z6	5 1" 3/4 Z6	5 1" 3/4 Z6	Z	-	-	9.301.006	33 34	std
	1.63	1000	110.3	638	5 1" 3/4 Z6	5 1" 3/4 Z6	5 1" 3/4 Z6	Z	1 ccw	-	9.301.236	33 34	std
	1.35	1000	141.9	973	5 1" 3/4 Z6	5 1" 3/4 Z6	5 1" 3/4 Z6	Z	-	-	9.301.019	33 34	std
	1.35	1000	141.9	973	1 1" 3/8 Z6	1 1" 3/8 Z6	1 1" 3/8 Z6	Z	1 ccw	-	9.301.280	33 34	std
- = =	**1.00**	1000	152.2	1410	5 1" 3/4 Z6	5 1" 3/4 Z6	5 1" 3/4 Z6	Z	-	-	9.301.016	33 34	std
	1.00	1000	152.2	1410	5 1" 3/4 Z6	5 1" 3/4 Z6	5 1" 3/4 Z6	Z	1 ccw	-	9.301.255	33 34	std
	1.00	1000	184	1790	5 1" 3/4 Z6	5 1" 3/4 Z6	5 1" 3/4 Z6	Z	1 ccw 5	-	9.301.346	33 34	std

T-331A

Code **331**

(1.01)

[kg] 106 | [l] -

Per configurazioni non a catalogo contattare Servizio Tecnico-Commerciale
For non-catalog configurations contact Technical-Commercial Service

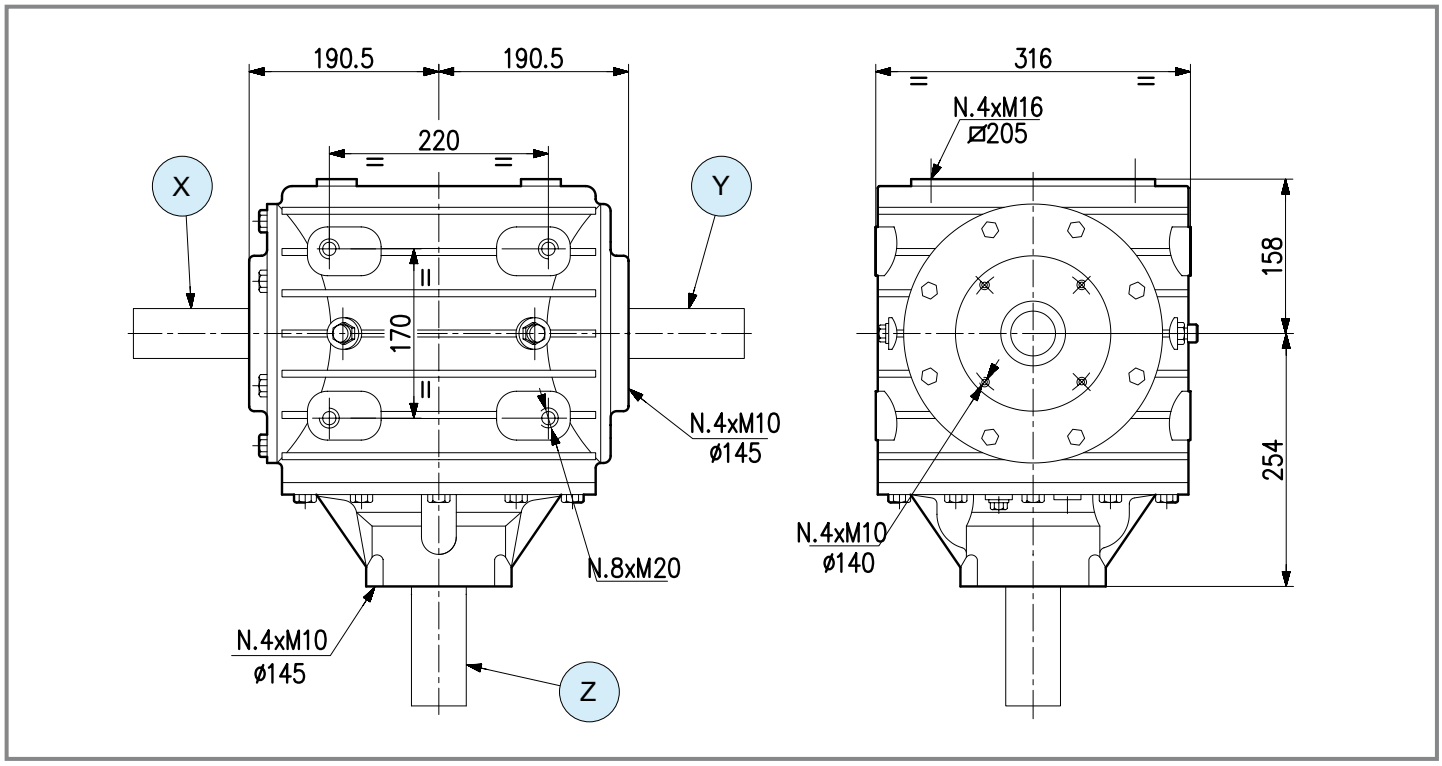

	i	N_1 [rpm]	P_1 [kW]	M_2 [Nm]	Shaft type X	Shaft type Y	Shaft type Z	Input	Features	Lenght [mm]	Code	Mounting	
					1 - Ruota libera / *Free wheel*								
M	**1.94**	540	205.9	1820	5 1" 3/4 Z6	5 1" 3/4 Z6	5 1" 3/4 Z6	Z	-	-	9.331.000	33 34	std
M	**1.53**	1000	242.0	1570	6 1" 3/4 Z20	6 1" 3/4 Z20	6 1" 3/4 Z20	Z	1 ccw	-	9.331.006	33 34	std
M	**1.35**	1000	205.9	1412	6 1" 3/4 Z20	6 1" 3/4 Z20	6 1" 3/4 Z20	Z	1 ccw	-	9.331.008	33 34	std
-	**1.00**	1000	264.7	2451	6 1" 3/4 Z20	6 1" 3/4 Z20	6 1" 3/4 Z20	Z	1 ccw	-	9.331.017	33 34	std
-	**1.00**	1000	264.7	2451	6 1" 3/4 Z20	6 1" 3/4 Z20	6 1" 3/4 Z20	Z	-	-	9.331.019	33 34	std
R	**2.54**	1000	147.0	3458	5 1" 3/4 Z6	5 1" 3/4 Z6	82 L 99 ø 65	X	-	1550	9.331.030	11 12	std

Questa pagina è lasciata intenzionalmente bianca
This page is intentionally left blank

FALCIADISTRUGGIERBA E DECESPUGLIATRICI
ROTARY MOWERS AND ROTARY CUTTERS

(1.02) (1.03)

	i	$P_{1\text{ - max}}$ [kW]	$M_{2\text{ - max}}$ [Nm]	Tipologia alberi disponibili *Available type of shafts*	p.
LF-211J	M 2.83 - - R -	14.7	89	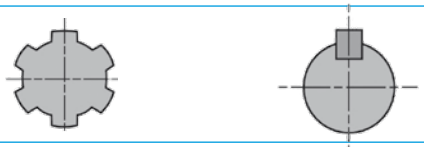	88
LF-151A	M 1.90 ÷3.30 - - R -	40.4	365	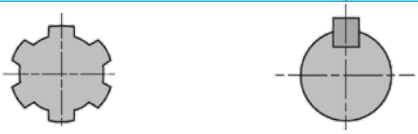	89
LF-141A	M 1.46 ÷2.83 - - R -	29.4	345	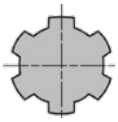	90
LF-205J	M 1.47 ÷1.92 - - R -	29.5	344	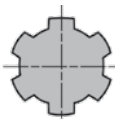	91
LF-140J **LF-140A**	M 1.27 ÷1.93 - 1.00 R -	44	594	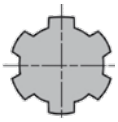	92
LF-32A	M 1.93 - 1.00 R -	44.2	756	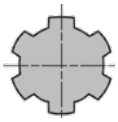	93
LF-199A	M 2.54 ÷3.09 - - R -	51.5	286	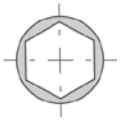	94
LF-149B	M 1.35 ÷1.83 - 1.00 R -	66.2	654		95
LF-139A	M 1.20 ÷1.50 - - R -	66	755	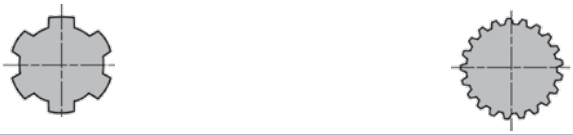	96
LF-227J	M 1.44 ÷1.83 - - R -	55.1	656		97
LF-125J	M 1.77 - 1.00 R -	93	901	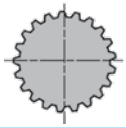	98
TF-26A	M 1.47 ÷1.84 - - R -	66	770	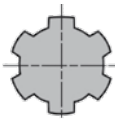	99

	i	P_{1-max} [kW]	M_{2-max} [Nm]	Tipologia alberi disponibili *Available type of shafts*	p.
TF-285B	M + 1.20 - = - R + -	91.9	709	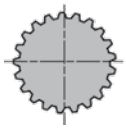	100
T-25J	M + 1.20 ÷1.35 - = - R + 1.20 ÷1.35	130	1445	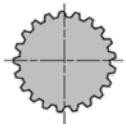	101
T-305J	M + 1.35 - = - R + 1.20 ÷1.35	183.8	2335	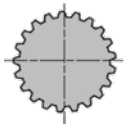	102

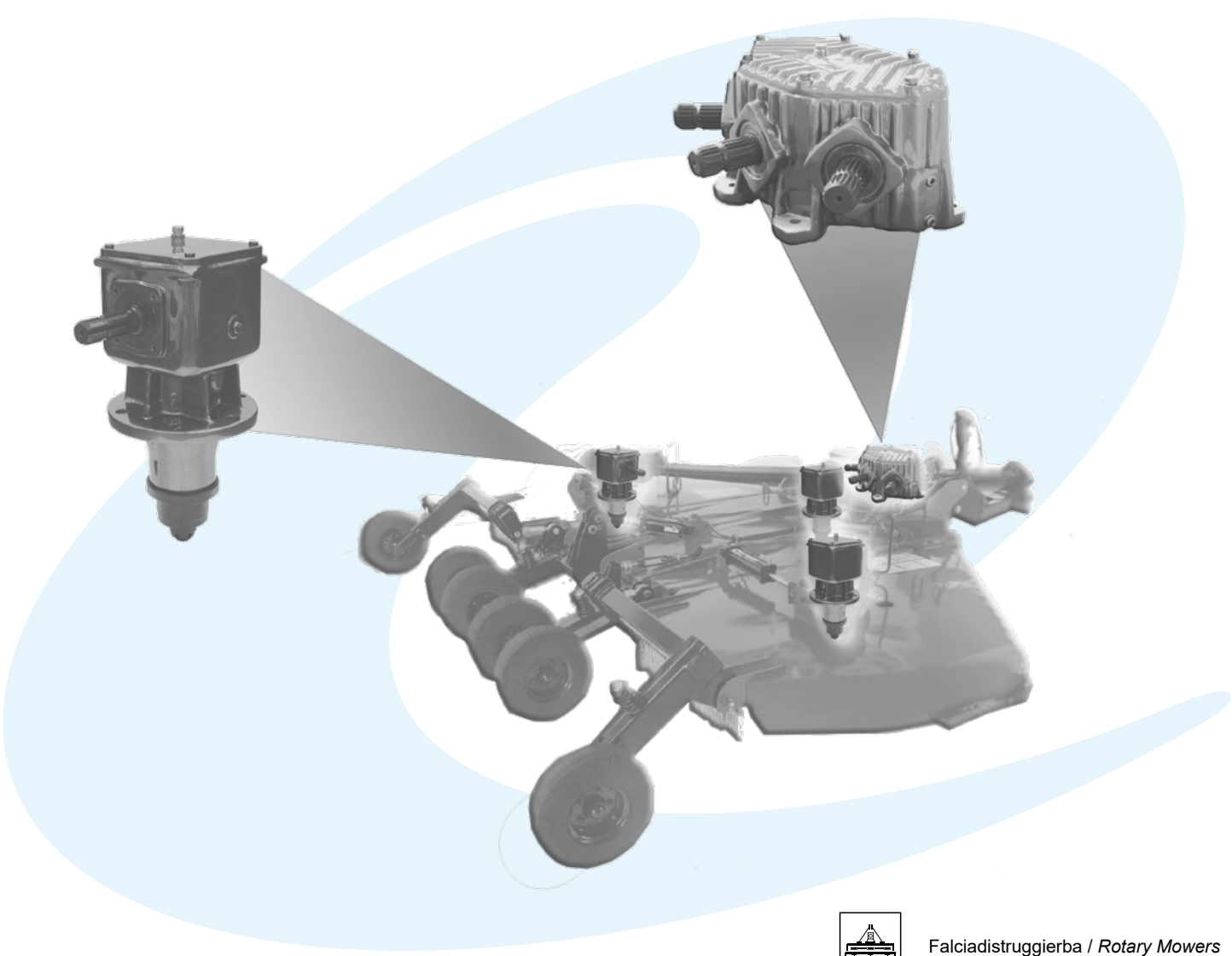

(1.02) Falciadistruggierba / *Rotary Mowers*

(1.03) Decespugliatore / *Rotary cutters*

Per configurazioni non a catalogo contattare Servizio Tecnico-Commerciale
For non-catalog configurations contact Technical-Commercial Service

LF-211J

Code **211.8**

(1.02)

kg [kg]	16	OIL [l]	0.8

Per configurazioni non a catalogo contattare Servizio Tecnico-Commerciale
For non-catalog configurations contact Technical-Commercial Service

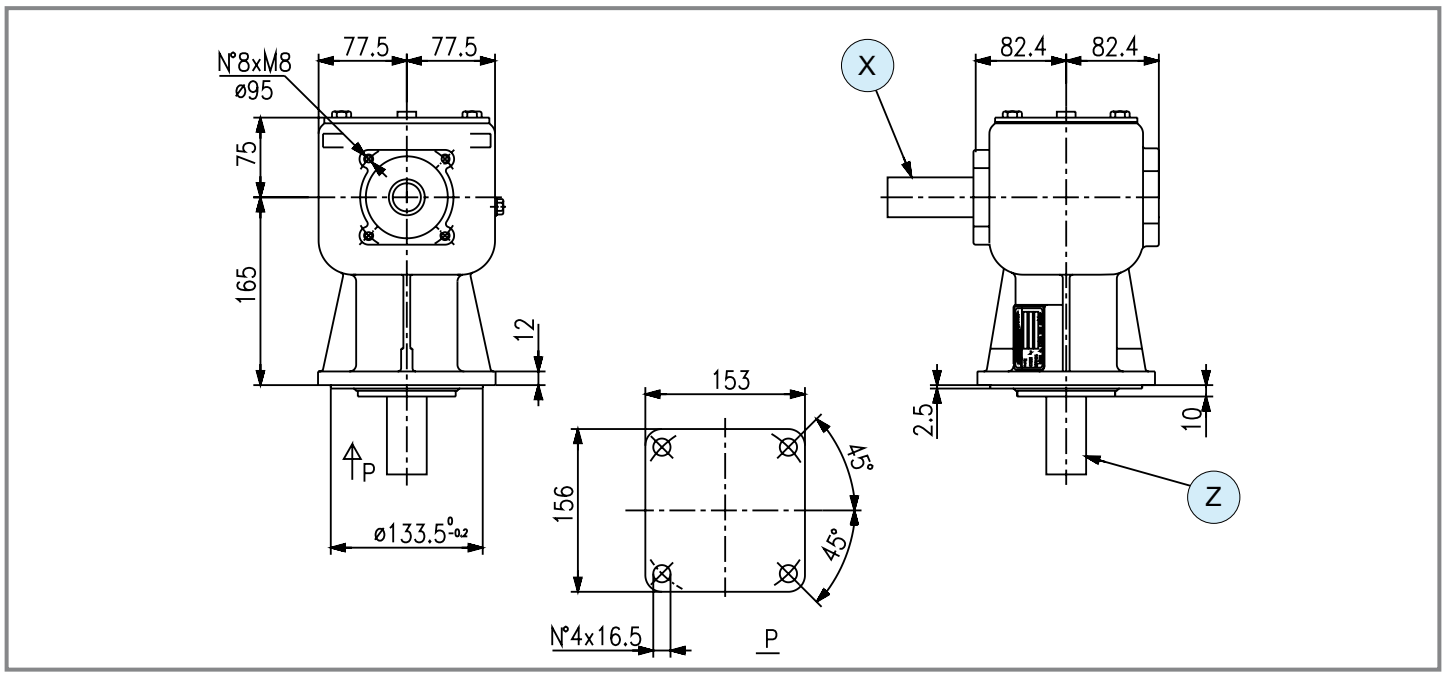

	i	N_1 [rpm]	P_1 [kW]	M_2 [Nm]	Shaft type X	Shaft type Y	Shaft type Z	Input	Features	Code	Mounting	
M	**2.83**	540	14.7	89	1 1" 3/8 Z6	-	14 L 83 ø 33	X	-	9.211.802	21 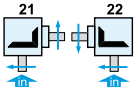 22	std
M	**2.83**	540	14.7	89	1 1" 3/8 Z6	-	14 L 83 ø 33	X	-	9.211.803	23 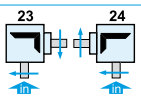 24	std

comer industries

LF-151A

Code **151**

(1.02)

[kg] 21.5 | [l] 1.3

Per configurazioni non a catalogo contattare Servizio Tecnico-Commerciale
For non-catalog configurations contact Technical-Commercial Service

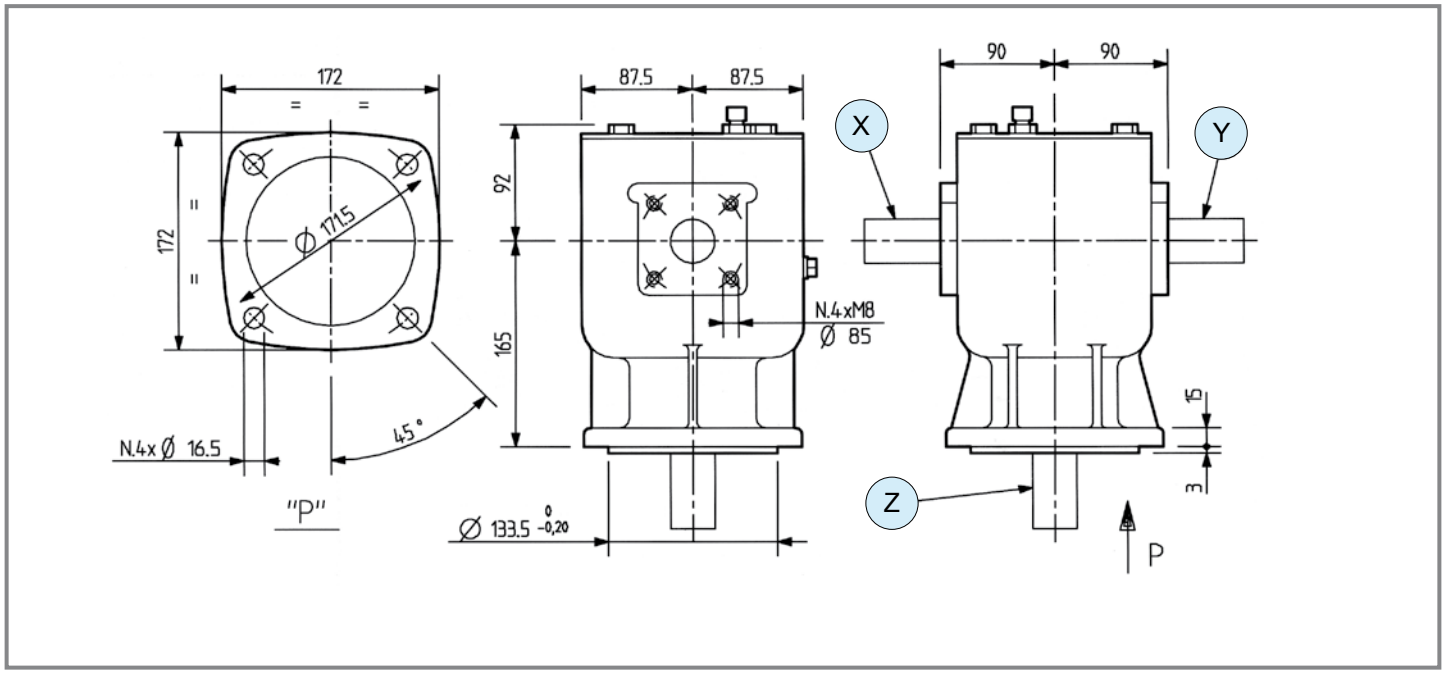

	i	N_1 [rpm]	P_1 [kW]	M_2 [Nm]	Shaft type X	Shaft type Y	Shaft type Z	Input	Features	Code	Mounting	
	3.30	540	29.4	153	1 — 1" 3/8 Z6	-	3 — L 70 — ø 35	X	-	9.151.306	21 22	std
	3.00	540	35.3	202	1 — 1" 3/8 Z6	1 — 1" 3/8 Z6	3 — L 91 — ø 35	Y	-	9.151.012	27 28	std
	3.00	540	33.0	189	1 — 1" 3/8 Z6	-	3 — L 91 — ø 35	X	-	9.151.000	21 22	std
	3.00	540	33.0	189	1 — 1" 3/8 Z6	-	3 — L 91 — ø 35	X	-	9.151.001	23 24	std
M	**3.00**	540	33.0	189	3 — L 80 — ø 35	-	3 — L 91 — ø 35	X	-	9.151.100	21 22	std
	2.54	540	35.3	238	1 — 1" 3/8 Z6	-	3 — L 91 — ø 35	X	-	9.151.002	21 22	std
	2.54	540	35.3	238	1 — 1" 3/8 Z6	-	3 — L 91 — ø 35	X	-	9.151.003	23 24	std
	2.54	540	35.3	238	1 — 1" 3/8 Z6	1 — 1" 3/8 Z6	3 — L 91 — ø 35	Y	-	9.151.009	27 28	std
	1.90	540	40.4	365	1 — 1" 3/8 Z6	-	3 — L 70 — ø 35	X	-	9.151.013	23 24	std

LF-141A

Code **141**

(1.02)

(1.03)

[kg] 13.3 | [l] 0.5

Per configurazioni non a catalogo contattare Servizio Tecnico-Commerciale
For non-catalog configurations contact Technical-Commercial Service

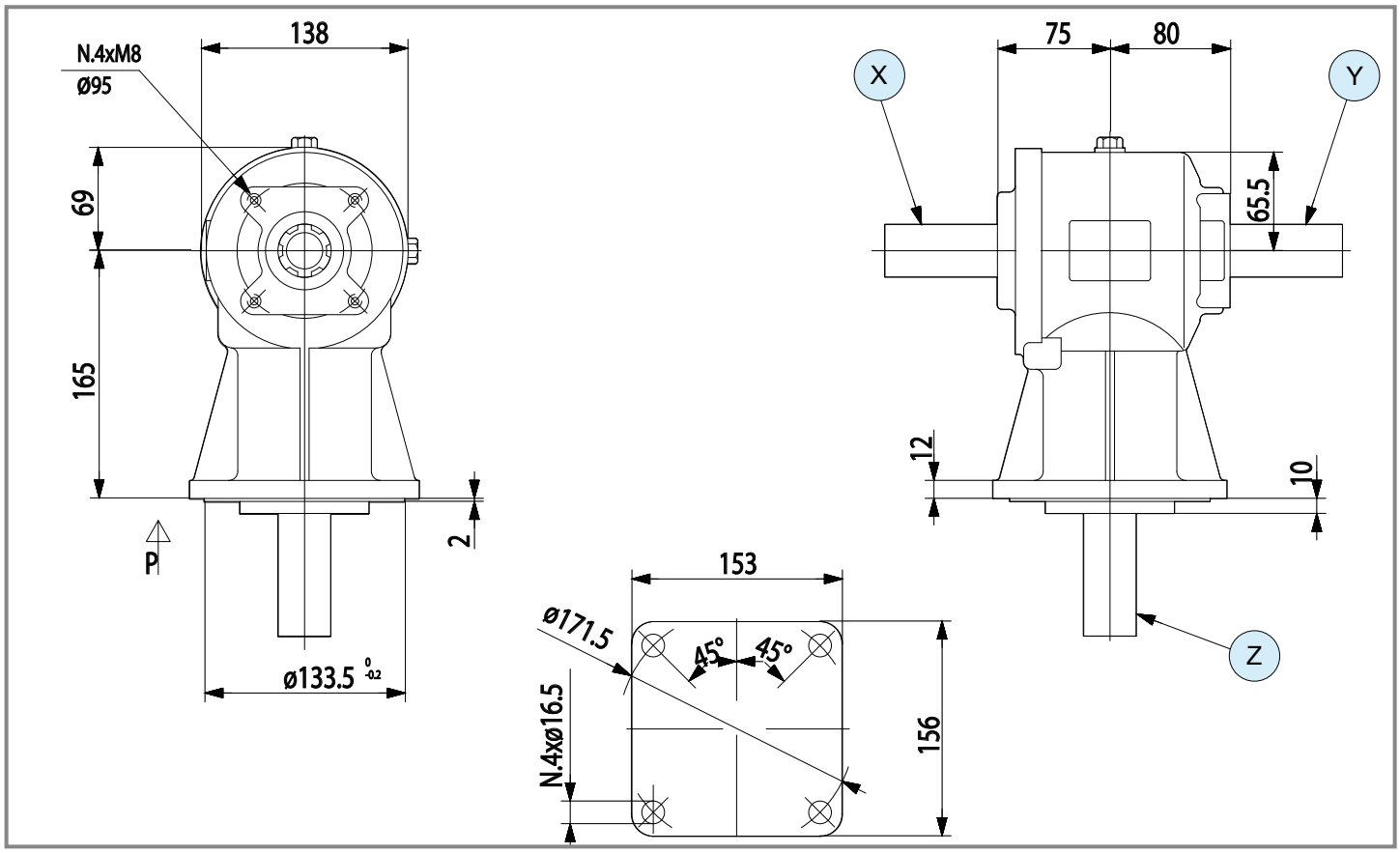

	i	N_1 [rpm]	P_1 [kW]	M_2 [Nm]	Shaft type X	Shaft type Y	Shaft type Z	Input	Features	Code	Mounting	
M	**2.83**	540	14.7	89	1 1" 3/8 Z6	1 1" 3/8 Z6	14 L 83 ø 33	X	-	9.141.011	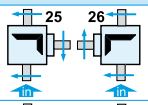	std
	1.46	540	29.4	345	1 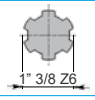 1" 3/8 Z6	1 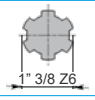 1" 3/8 Z6	14 L 83 ø 33	Y	-	9.141.012	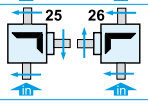	std

comer industries

LF-205J

Code **205.8**

(1.03)

[kg]	16	[l]	0.8

Per configurazioni non a catalogo contattare Servizio Tecnico-Commerciale
For non-catalog configurations contact Technical-Commercial Service

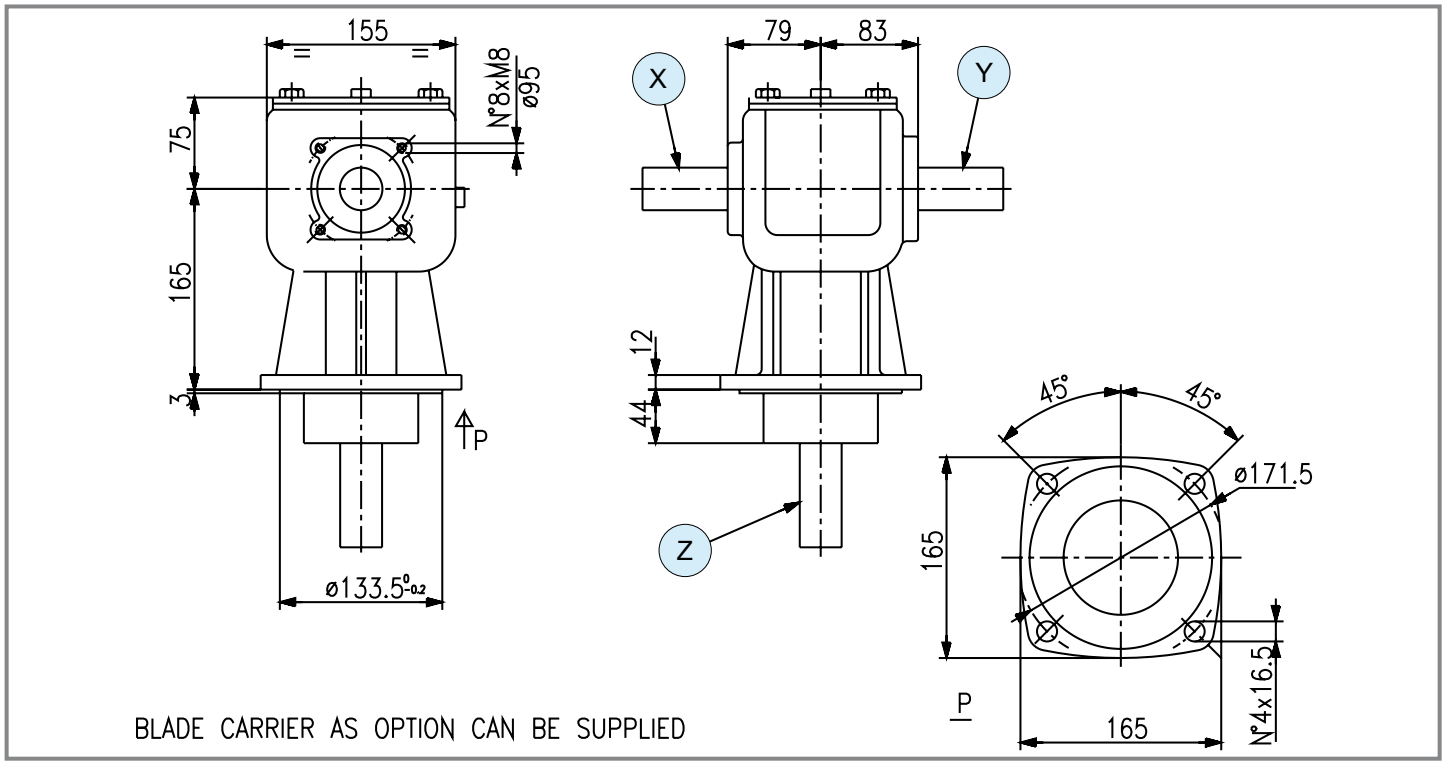

	i	N_1 [rpm]	P_1 [kW]	M_2 [Nm]	Shaft type X	Shaft type Y	Shaft type Z	Input	Features	Code	Mounting	
					1 - Ruota libera / *Free wheel*							
	1.92	540	22.0	197	1 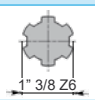 1" 3/8 Z6	-	Hub Connection	X	-	9.205.805	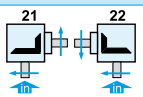 21 22	std
	1.92	540	22.0	197	1 1" 3/8 Z6	1 1" 3/8 Z6	Hub Connection	Y	-	9.205.809	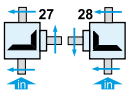 27 28	std
M	**1.92**	540	22.0	197	1 1" 3/8 Z6	-	Hub Connection	X	1 ccw	9.205.879	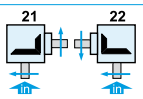 21 22	std
	1.47	540	29.5	344	1 1" 3/8 Z6	-	Hub Connection	X	-	9.205.829	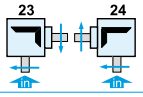 23 24	std
	1.47	540	29.5	344	1 1" 3/8 Z6	-	Hub Connection	X	-	9.205.801	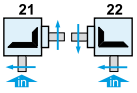 21 22	std

LF-140J | LF-140A

Code **140.8** | Code **140**

(1.03)

[kg] 30 | [l] -

Per configurazioni non a catalogo contattare Servizio Tecnico-Commerciale
For non-catalog configurations contact Technical-Commercial Service

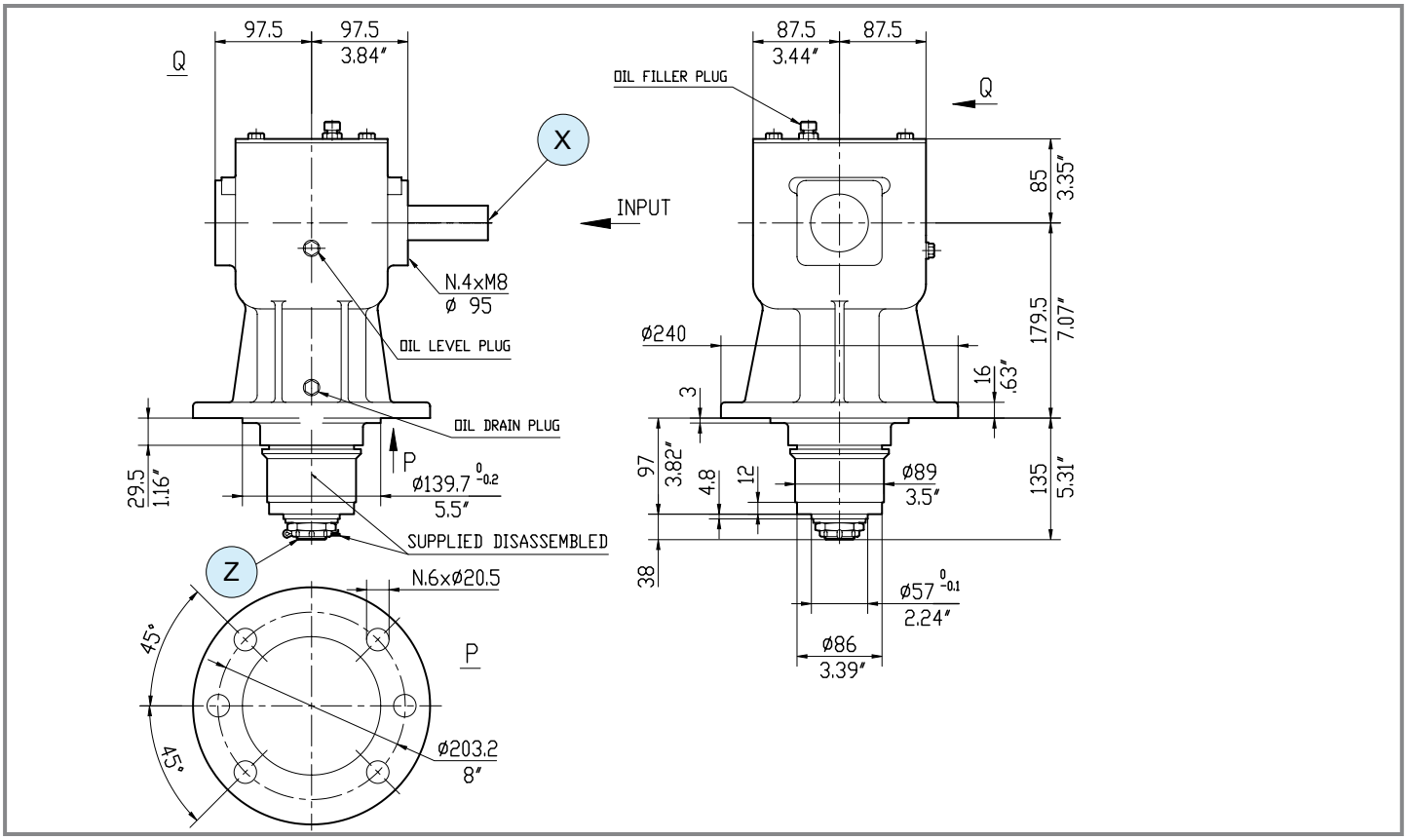

	1 - Ruota libera / *Free wheel*											
	i	N_1 [rpm]	P_1 [kW]	M_2 [Nm]	Shaft type X	Shaft type Y	Shaft type Z	Input	Features	Code	Mounting	
	1.93	540	44.0	391	1 1" 3/8 Z6	-	Hub Connection	X	-	9.140.804	21 22	std
	1.93	540	44.0	391	1 1" 3/8 Z6	1 1" 3/8 Z6	Hub Connection	X	-	9.140.872	27 28	std
	1.93	540	44.0	594	1 1" 3/8 Z6	1 1" 3/8 Z6	Hub Connection	Y	-	9.140.211	27 28	std
M	**1.93**	540	44.0	391	1 1" 3/8 Z6	-	Hub Connection	X	-	9.140.876	23 24	std
	1.93	540	44.0	391	1 1" 3/8 Z6	-	Hub Connection	X	1 ccw	9.140.878	21 22	std
	1.50	540	44.0	503	1 1" 3/8 Z6	-	Hub Connection	X	-	9.140.810	23 24	std
	1.50	540	44.0	503	1 1" 3/8 Z6	-	Hub Connection	X	-	9.140.811	21 22	std
-	**1.00**	540	44.0	755	1 1" 3/8 Z6	1 1" 3/8 Z6	Hub Connection	Y	-	9.140.881	27 28	std

comer industries

LF-32A

Code **132**

(1.03)

[kg]	30

[l]	2.0

Per configurazioni non a catalogo contattare Servizio Tecnico-Commerciale
For non-catalog configurations contact Technical-Commercial Service

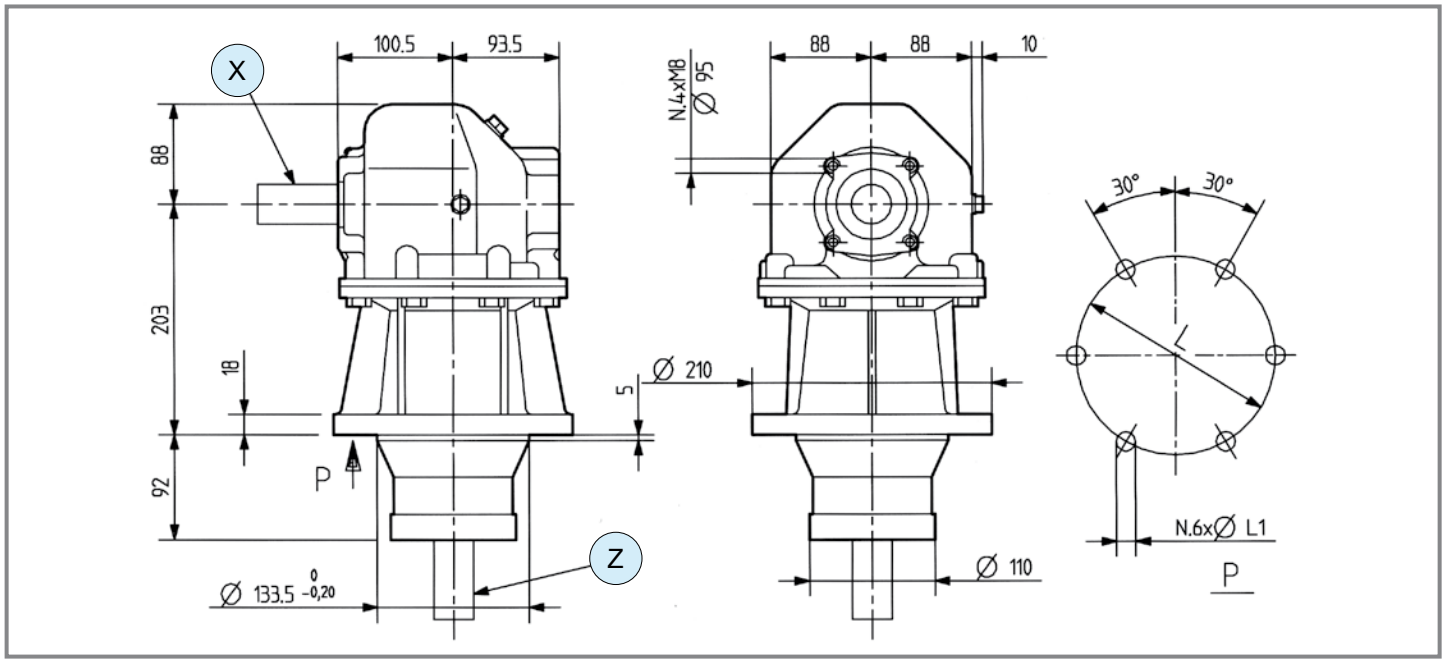

	i	N_1 [rpm]	P_1 [kW]	M_2 [Nm]	Shaft type X	Shaft type Y	Shaft type Z	Input	Features	Code	Mounting	
M	**1.93**	540	44.1	393	1 1" 3/8 Z6	-	Hub Connection	X	-	9.132.003	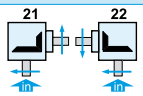	std
-	**1.00**	540	44.1	756	1 1" 3/8 Z6	-	Hub Connection	X	-	9.132.007	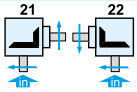	std
	1.00	540	44.1	756	1 1" 3/8 Z6	-	Hub Connection	X	-	9.132.009	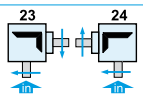	std

LF-199A

Code **199**

[kg]	[l]

Per configurazioni non a catalogo contattare Servizio Tecnico-Commerciale
For non-catalog configurations contact Technical-Commercial Service

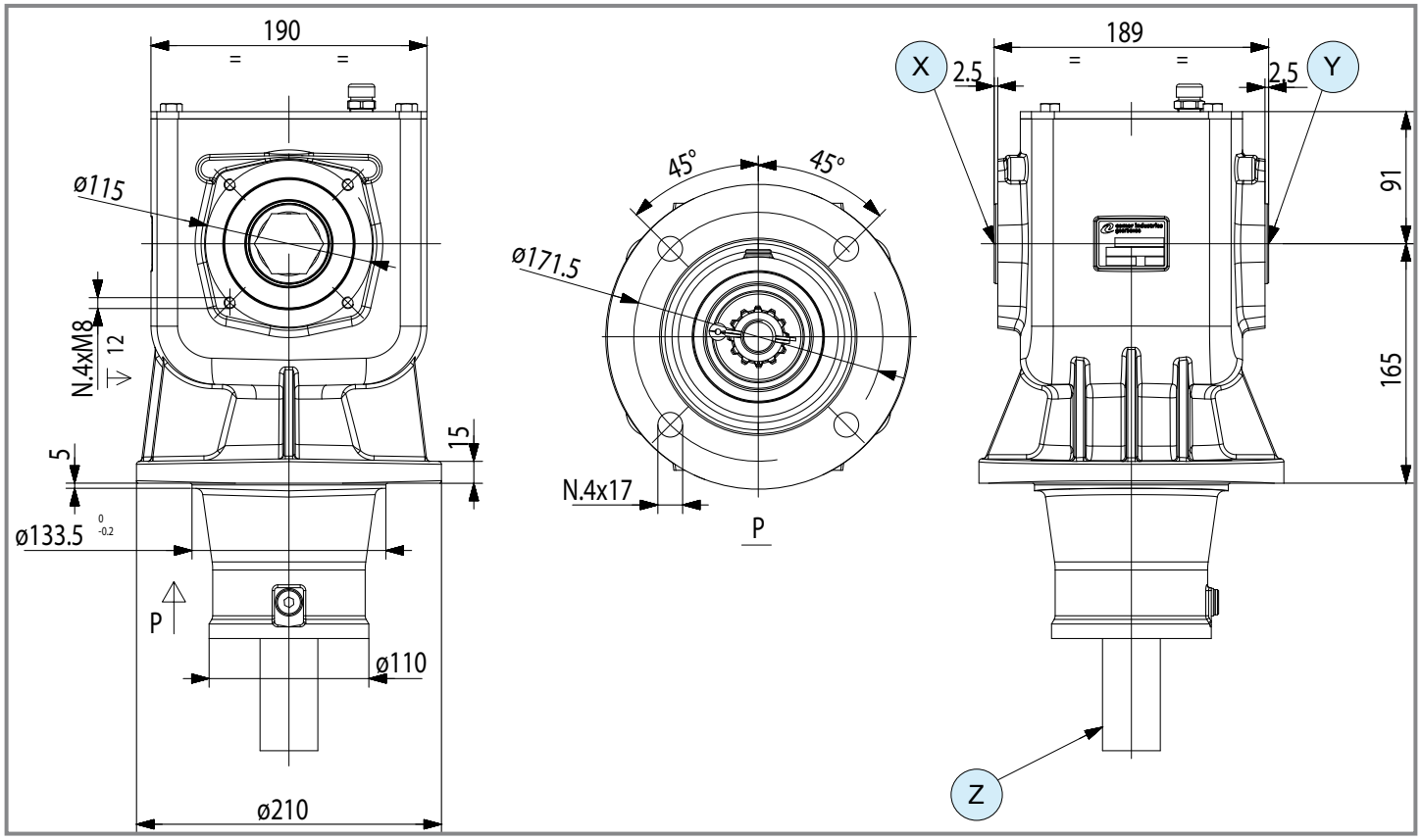

	3 - Dentatura elicoidale / *Helical Teeth*											
	i	N_1 [rpm]	P_1 [kW]	M_2 [Nm]	Shaft type X	Shaft type Y	Shaft type Z	Input	Features	Code	Mounting	
M	**3.09**	540	51.5	286	38 41	38 41	Hub Connection	X	3	9.199.300	25 26 in in	std
	2.54	540	33.0	223	38 41	38 41	Hub Connection	X	-	9.199.004	25 26 in in	std

comer industries

LF-149B

Code **149**

(1.03)

[kg] 32 | [l] 2.4

Per configurazioni non a catalogo contattare Servizio Tecnico-Commerciale
For non-catalog configurations contact Technical-Commercial Service

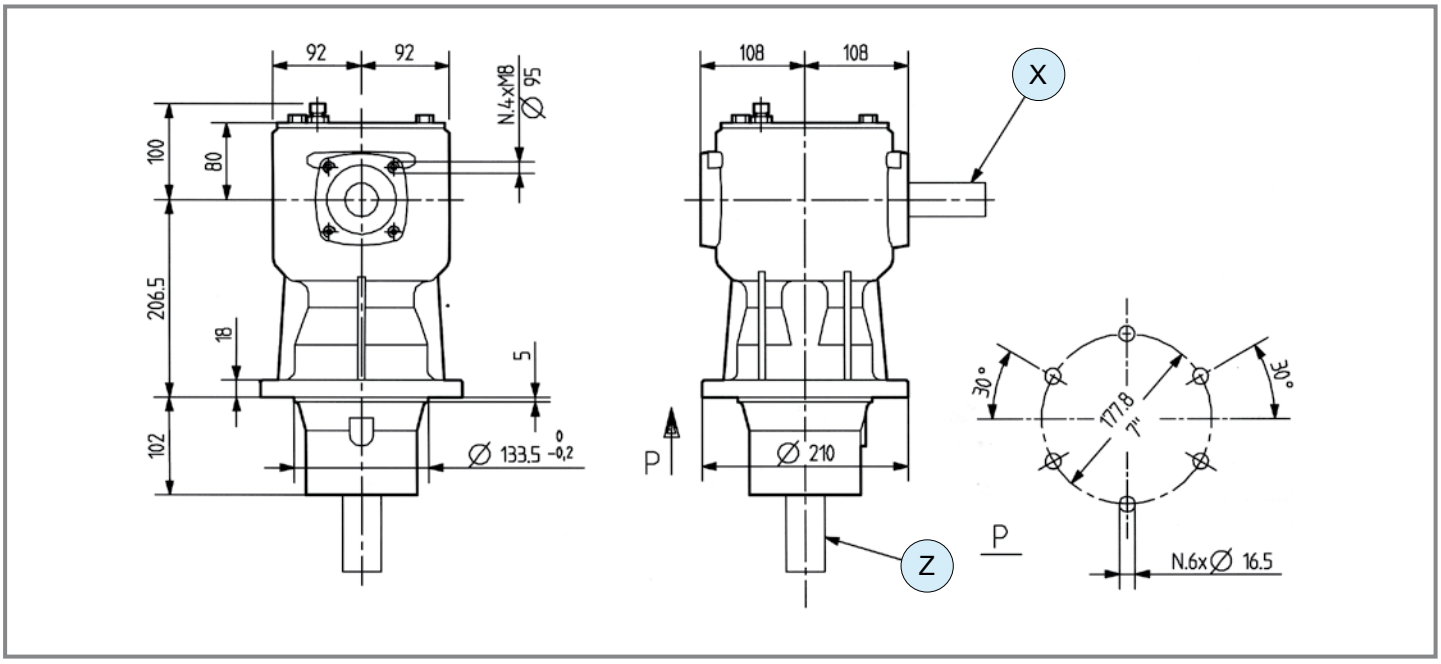

	i	N_1 [rpm]	P_1 [kW]	M_2 [Nm]	Shaft type X	Shaft type Y	Shaft type Z	Input	Features	Code	Mounting	
M	**1.83**	540	55.1	516	1 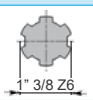 1" 3/8 Z6	-	Hub Connection	X	-	9.149.016	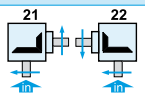 21 22	std
M	**1.35**	540	51.5	654	1 1" 3/8 Z6	-	Hub Connection	X	-	9.149.034	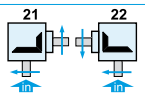 21 22	std
-	**1.00**	1000	66.2	613	2 1" 3/8 Z21	-	Hub Connection	X	-	9.149.029	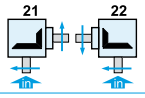 21 22	std
-	**1.00**	1000	66.2	613	2 1" 3/8 Z21	-	Hub Connection	X	-	9.149.033	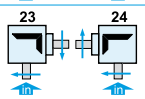 23 24	std

LF-139A

Code **139**

(1.03)

[kg] 39 | [l] 3.0

Per configurazioni non a catalogo contattare Servizio Tecnico-Commerciale
For non-catalog configurations contact Technical-Commercial Service

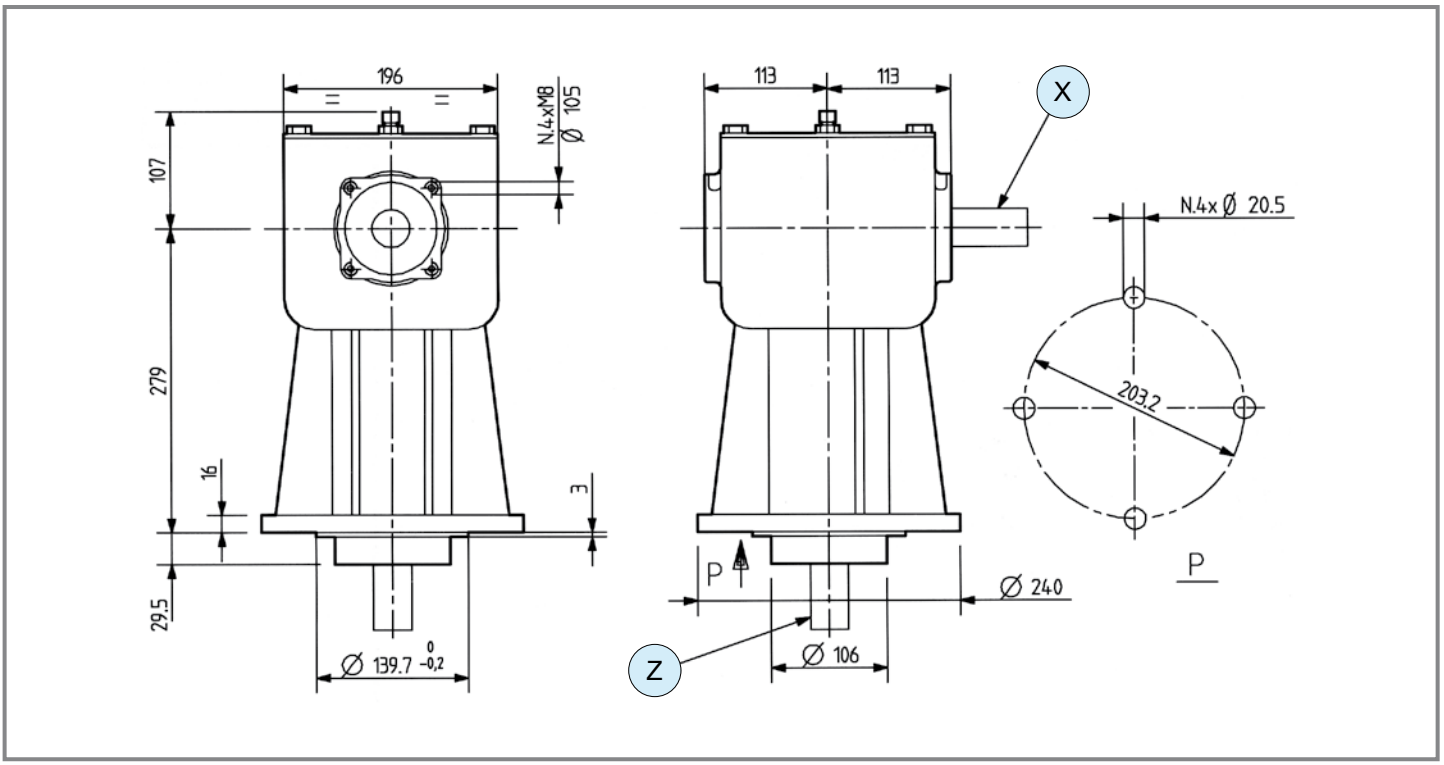

	i	N_1 [rpm]	P_1 [kW]	M_2 [Nm]	Shaft type X	Shaft type Y	Shaft type Z	Input	Features	Code	Mounting	
	1.50	540	66.0	755	1 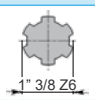 1" 3/8 Z6	-	Hub Connection	X	-	9.139.001	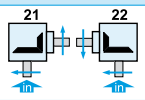	std
	1.50	540	66.0	755	6 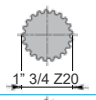 1" 3/4 Z20	-	Hub Connection	X	-	9.139.200	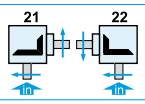	std
M	**1.50**	540	66.0	755	6 1" 3/4 Z20	-	Hub Connection	X	-	9.139.201	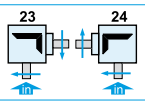	std
	1.20	1000	66.0	509	6 1" 3/4 Z20	-	Hub Connection	X	-	9.139.016	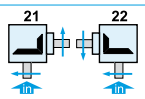	std
	1.20	1000	66.0	509	6 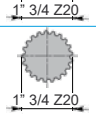 1" 3/4 Z20	-	Hub Connection	X	-	9.139.017	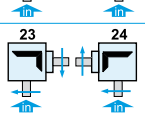	std

LF-227J

Code **227.8**

(1.03)

[kg] 39.3 | [l] 2.5

Per configurazioni non a catalogo contattare Servizio Tecnico-Commerciale
For non-catalog configurations contact Technical-Commercial Service

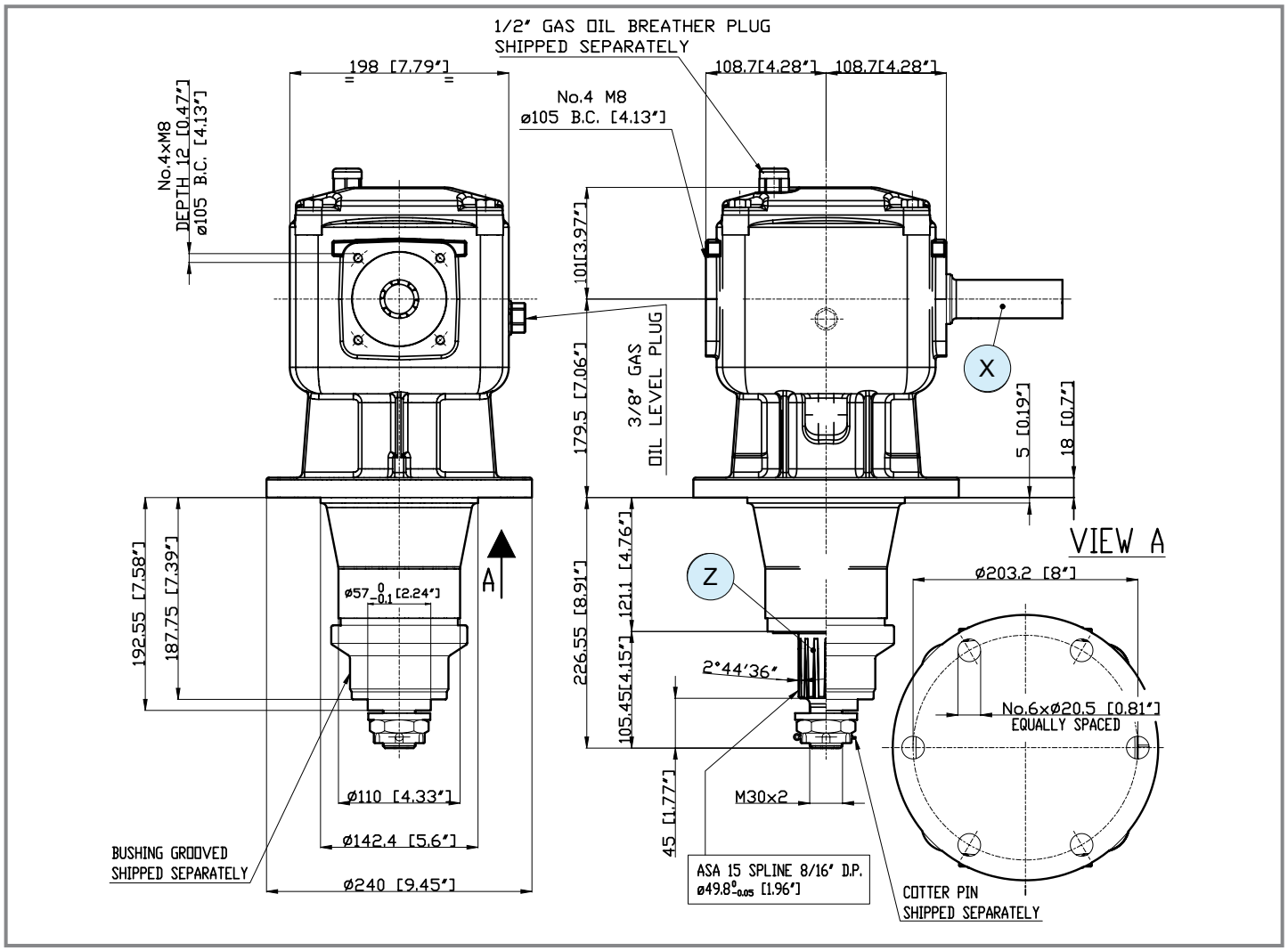

	i	N_1 [rpm]	P_1 [kW]	M_2 [Nm]	Shaft type X	Shaft type Y	Shaft type Z	Input	Features	Code	Mounting	
	1.83	540	55.1	516	1 — 1" 3/8 Z6	-	Hub Connection	X	-	9.227.804	21 22	std
	1.44	540	55.1	656	1 — 1" 3/8 Z6	-	Hub Connection	X	-	9.227.801	21 22	std
M	**1.22**	540	55.1	775	6 — 1" 3/4 Z20	-	Hub Connection	X	-	9.227.815	21 22	std
	1.22	1000	76.0	577			Hub Connection					
	1.00	540	55.1	945	6 — 1" 3/4 Z20	-	Hub Connection	X	-	9.227.814	23 24	std
	1.00	1000	75.0	695			Hub Connection					

LF-125J

Code **125.8**

(1.03)

[kg]	60	[l]	5.8

Per configurazioni non a catalogo contattare Servizio Tecnico-Commerciale
For non-catalog configurations contact Technical-Commercial Service

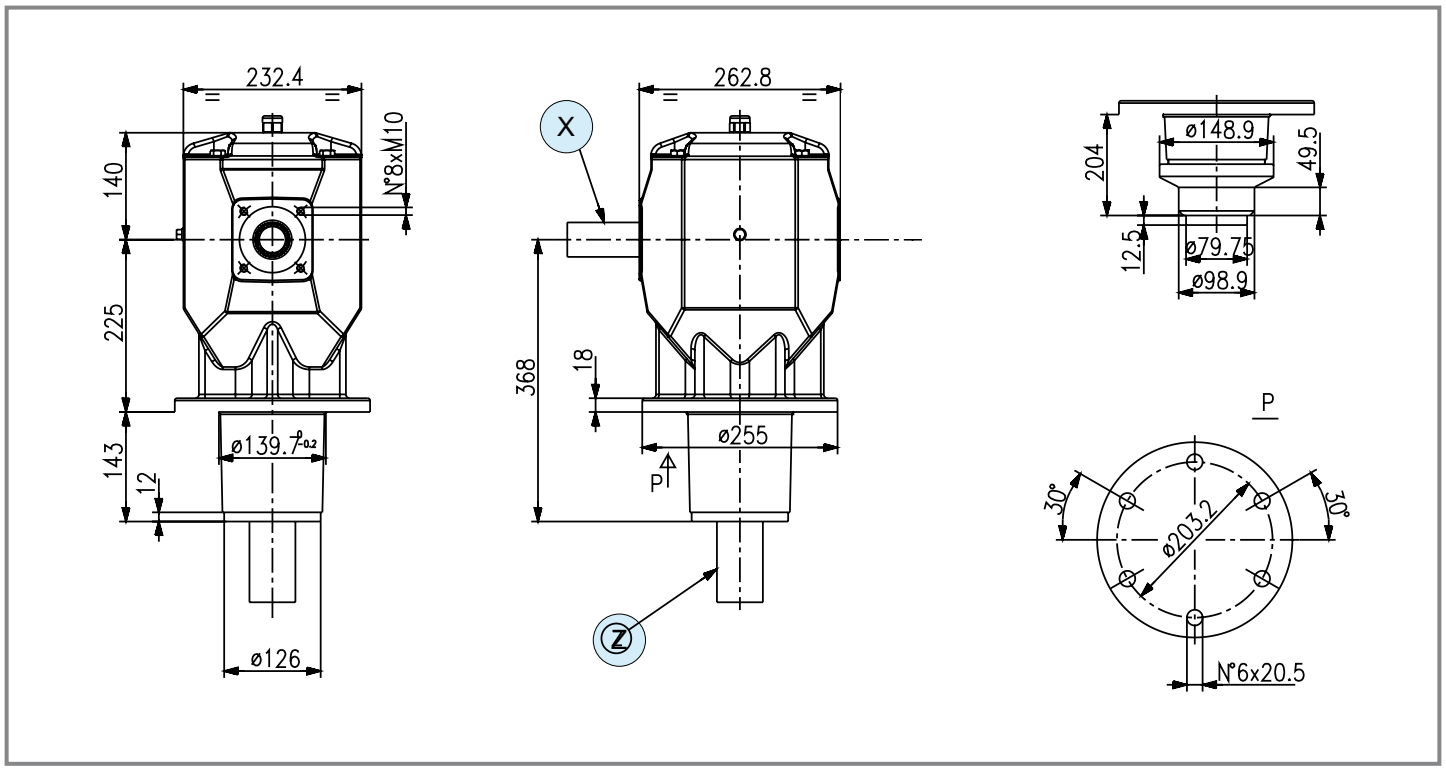

	i	N_1 [rpm]	P_1 [kW]	M_2 [Nm]	Shaft type X	Shaft type Y	Shaft type Z	Input	Features	Code	Mounting	
M	**1.77**	540	93.0	901	6 1" 3/4 Z20	-	Hub Connection	X	-	9.125.874	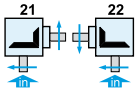	std
-	**1.00**	1000	93.0	861	6 1" 3/4 Z20	-	Hub Connection	X	-	9.125.872	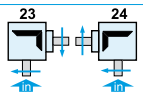	std

comer industries

TF-26A

Code **266**

(1.03)

[kg]	34

[l]	2.2

Per configurazioni non a catalogo contattare Servizio Tecnico-Commerciale
For non-catalog configurations contact Technical-Commercial Service

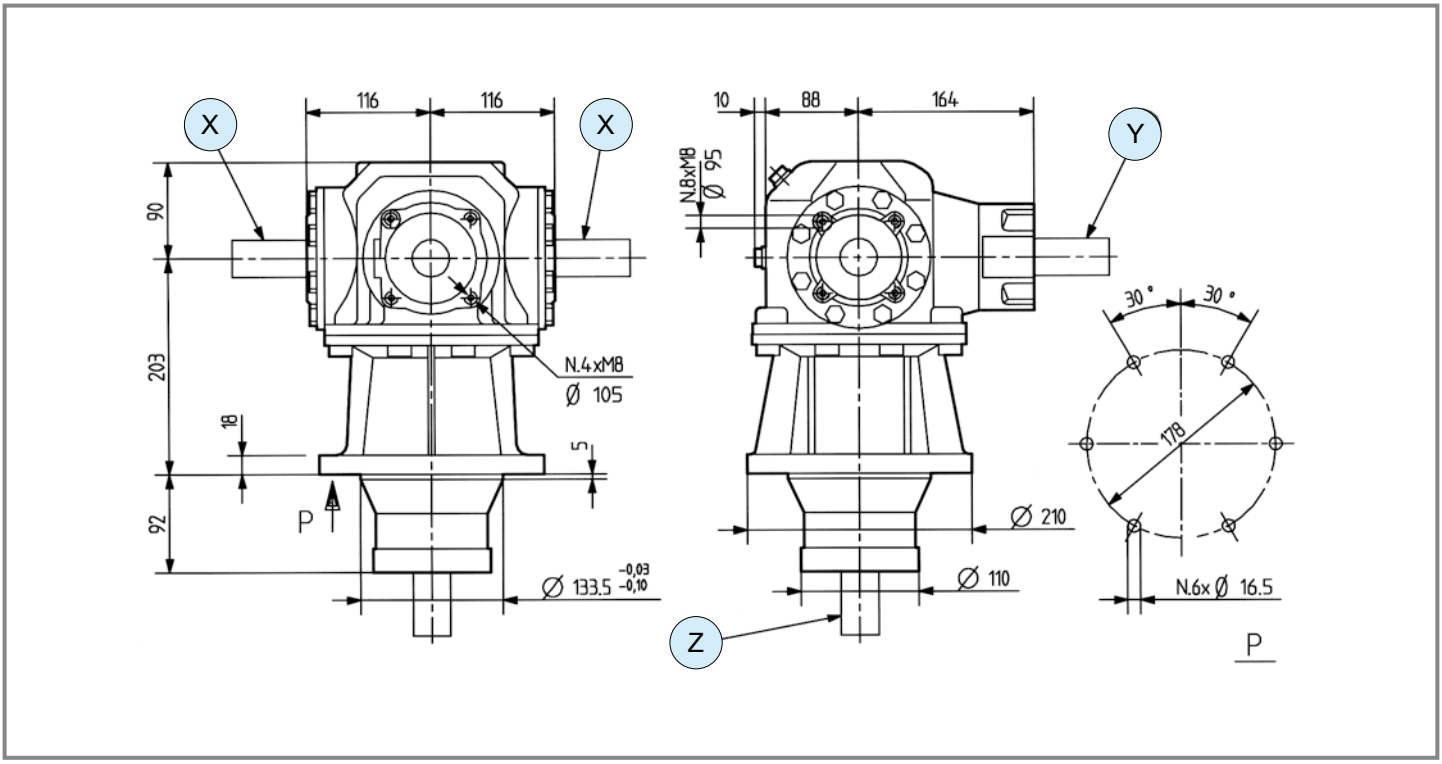

	i	N_1 [rpm]	P_1 [kW]	M_2 [Nm]	Shaft type X	Shaft type Y	Shaft type Z	Input	Features	Code	Mounting	
M	**1.84**	540	66.0	615	1 1" 3/8 Z6	1 1" 3/8 Z6	Hub Connection	Y	-	9.266.008	224 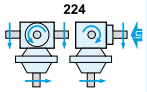	std
	1.47	540	66.0	770	1 1" 3/8 Z6	1 1" 3/8 Z6	Hub Connection	Y	-	9.266.205	224 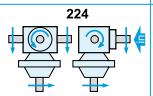	std

TF-285B

Code **285**

(1.03)

[kg]	50

[l]	3.2

Per configurazioni non a catalogo contattare Servizio Tecnico-Commerciale
For non-catalog configurations contact Technical-Commercial Service

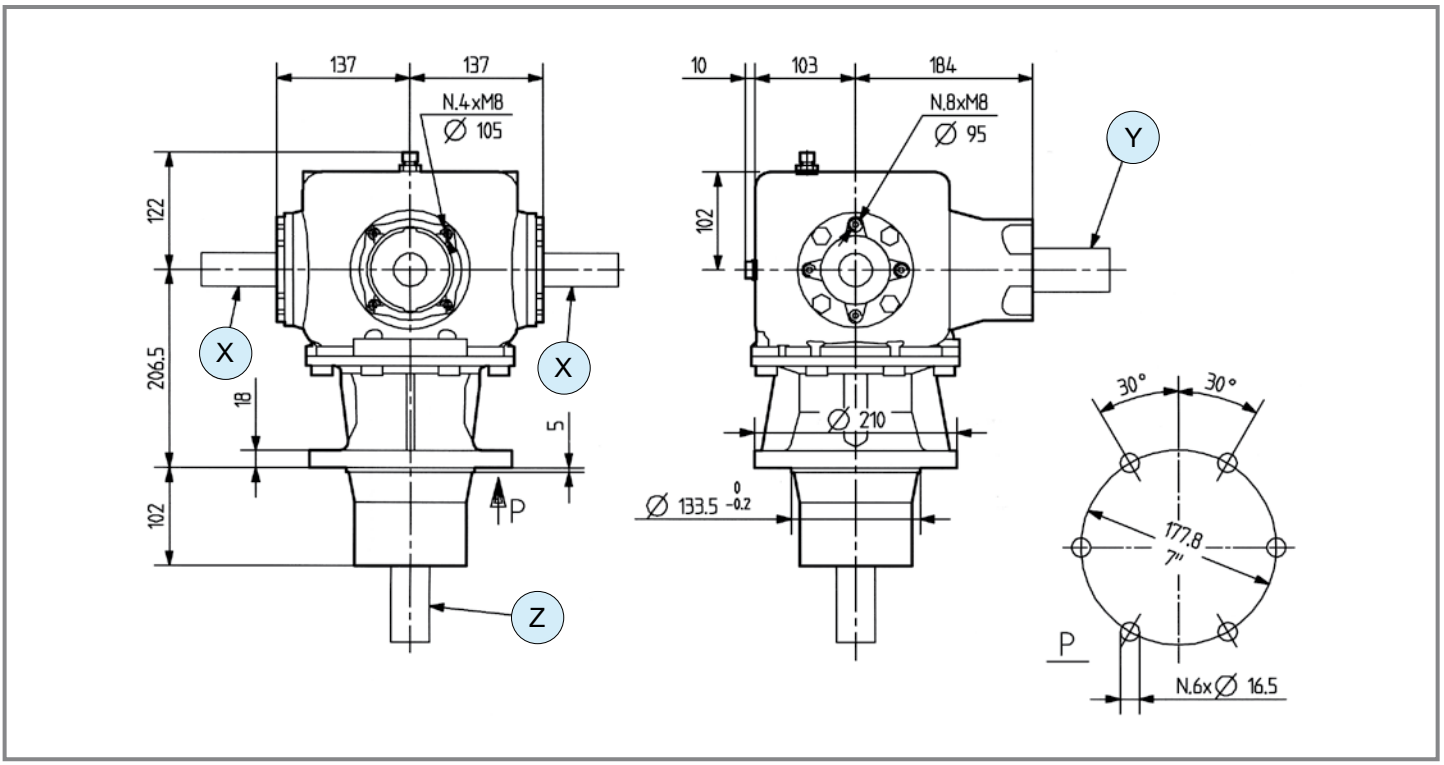

	i	N_1 [rpm]	P_1 [kW]	M_2 [Nm]	Shaft type X	Shaft type Y	Shaft type Z	Input	Features	Code	Mounting	
M	**1.20**	1000	91.9	709	2 1" 3/8 Z21	6 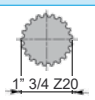 1" 3/4 Z20	Hub Connection	Y	-	9.285.013	224 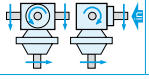	std

comer industries

T-25J

Code **265.8**

(1.03)

[kg] 39.5 | [l] 1.8

Per configurazioni non a catalogo contattare Servizio Tecnico-Commerciale
For non-catalog configurations contact Technical-Commercial Service

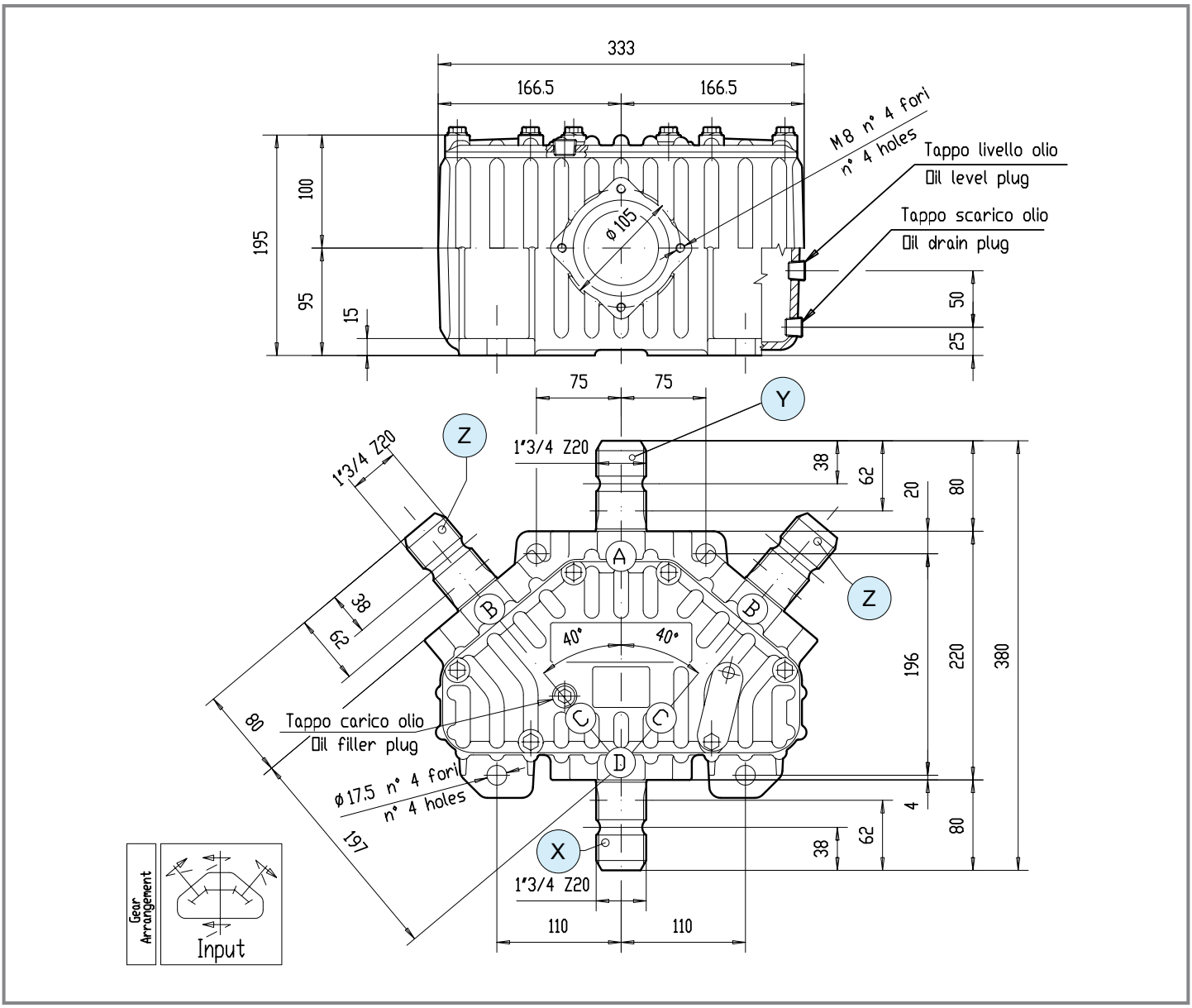

	i	N_1 [rpm]	P_1 [kW]	M_2 [Nm]	Shaft type X	Shaft type Y	Shaft type Z	Input	Features	Code	Mounting	
M	1.35	540	88.0	1118	6 1" 3/4 Z20	6 1" 3/4 Z20	6 1" 3/4 Z20	X	-	9.265.870	219	std
M	1.20	540	93.1	1331	6 1" 3/4 Z20	6 1" 3/4 Z20	6 1" 3/4 Z20	X	-	9.265.801	219	std
R	1.20	1000	130.0	1445	6 1" 3/4 Z20	6 1" 3/4 Z20	6 1" 3/4 Z20	X	-	9.265.800	219	std
R	1.35	1000	88.0	1100	6 1" 3/4 Z20	6 1" 3/4 Z20	6 1" 3/4 Z20	X	-	9.265.871	219	std

T-305J

Code **305.8**

(1.03)

[kg]	56

[l]	2.3

Per configurazioni non a catalogo contattare Servizio Tecnico-Commerciale
For non-catalog configurations contact Technical-Commercial Service

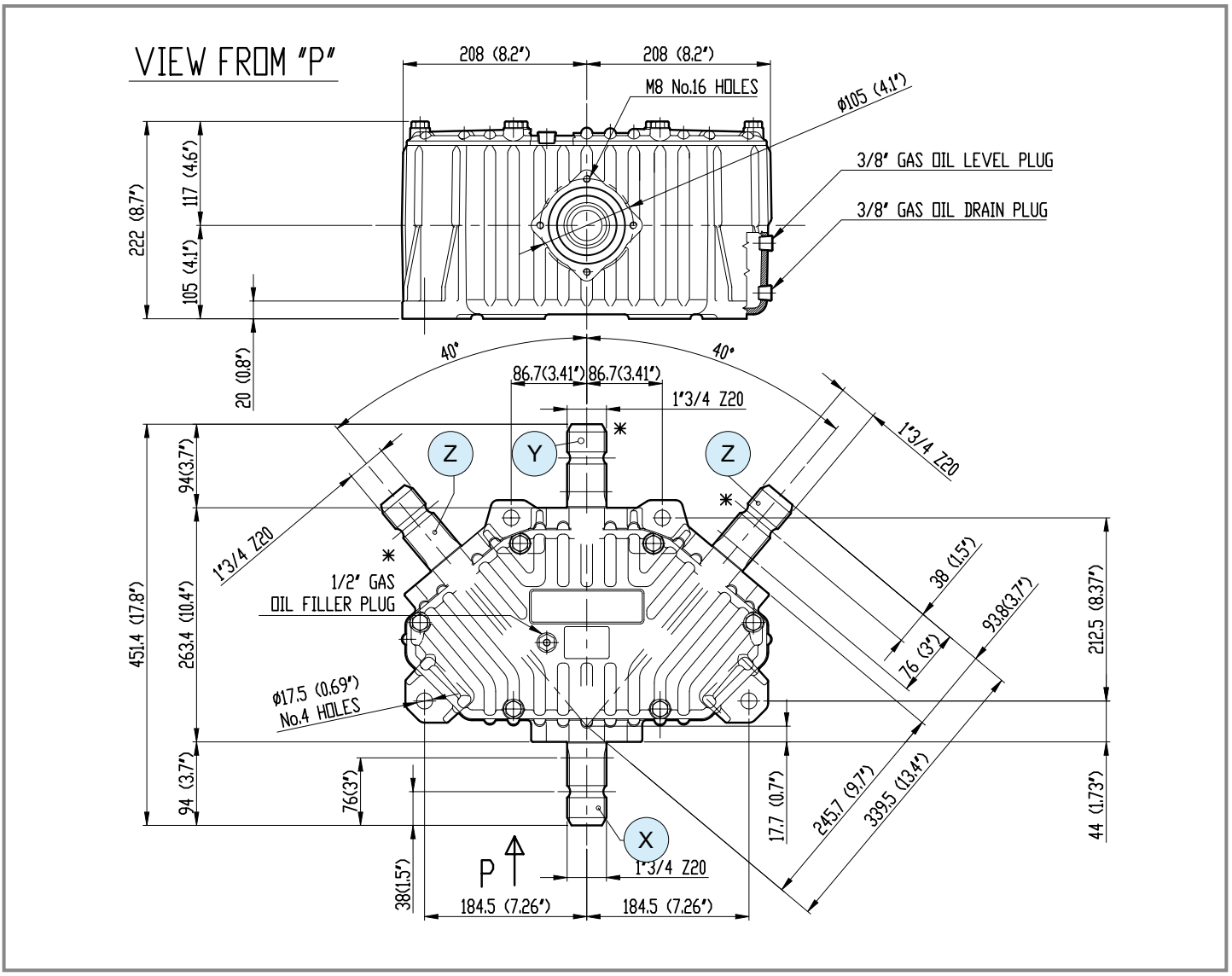

	i	N_1 [rpm]	P_1 [kW]	M_2 [Nm]	Shaft type X	Shaft type Y	Shaft type Z	Input	Features	Code	Mounting	
M	**1.35**	540	183.8	2335	6 1" 3/4 Z20	6 1" 3/4 Z20	6 1" 3/4 Z20	X	-	9.305.806	219	std
R	**1.20**	1000	183.8	2043	6 1" 3/4 Z20	6 1" 3/4 Z20	6 1" 3/4 Z20	X	-	9.305.815	219	std
	1.35	1000	183.8	2298	6 1" 3/4 Z20	6 1" 3/4 Z20	6 1" 3/4 Z20	X	-	9.305.801	219	std

comer industries

Questa pagina è lasciata intenzionalmente bianca
This page is intentionally left blank

	i		$P_{1 - max}$ [kW]	$M_{2 - max}$ [Nm]	Tipologia alberi disponibili *Available type of shafts*	p.
TB-19C	M	1.46	16.9	423	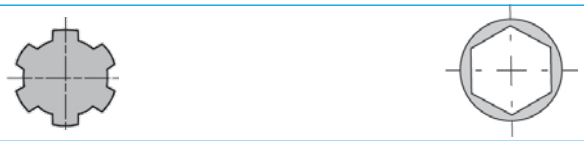	105
	-	1.00				
	R	1.46				
TB-27C	M	-	40.5	736	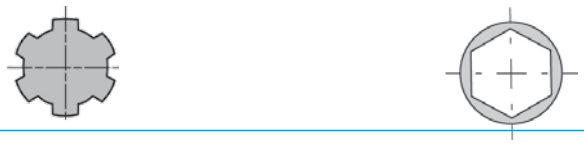	106
	-	1.00				
	R	1.46				
N-2A	M	-	23.5	-	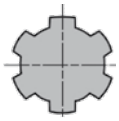	107
	-	-				
	R	5.67				

TB-19C

Code **259**

(1.04)

[kg] - | [l] -

Per configurazioni non a catalogo contattare Servizio Tecnico-Commerciale
For non-catalog configurations contact Technical-Commercial Service

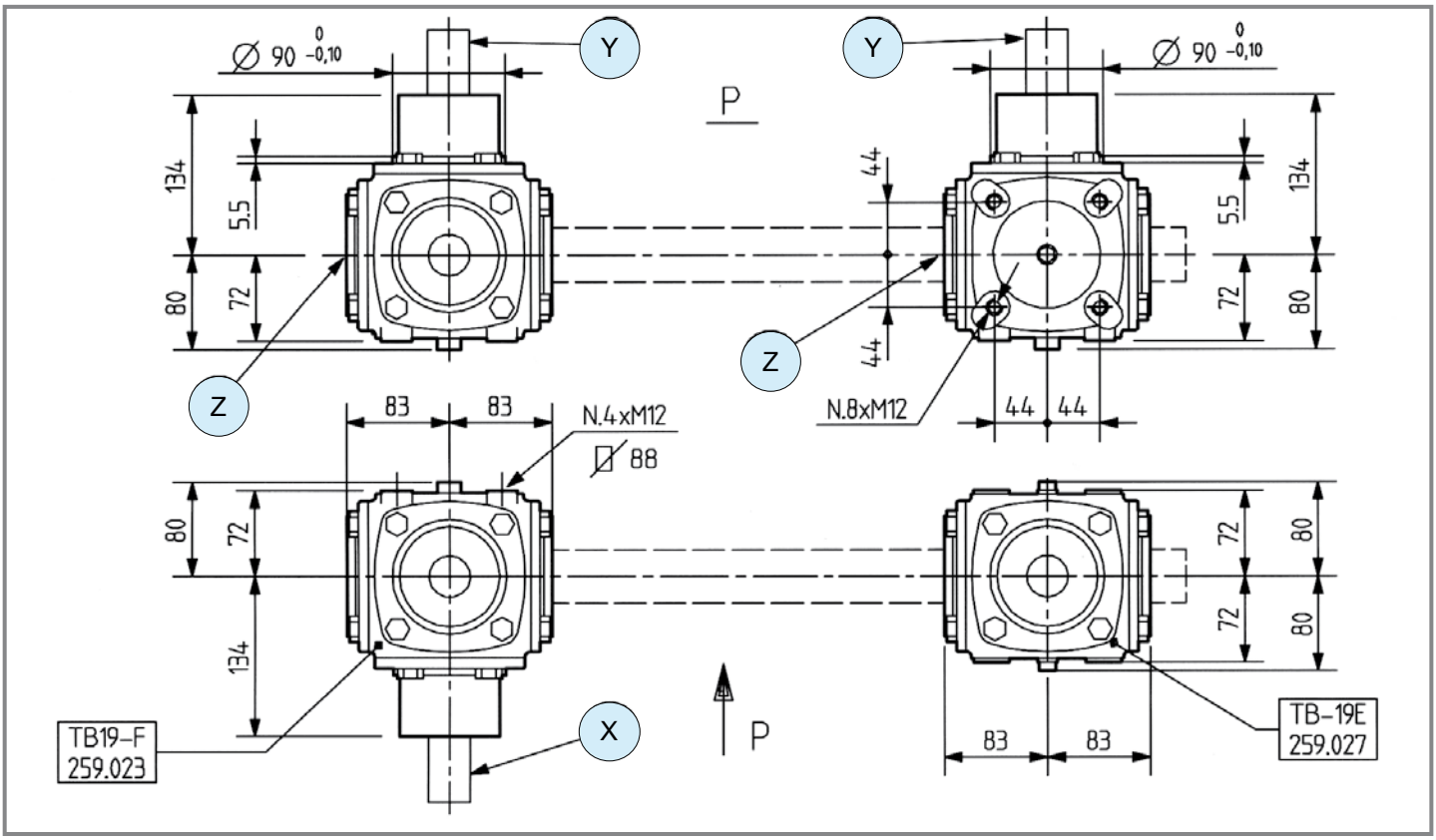

	i	N_1 [rpm]	P_1 [kW]	M_2 [Nm]	Shaft type X	Shaft type Y	Shaft type Z	Input	Features	Code	Mounting	
M	**1.46**	540	14.7	173	51 36	-	1 1" 3/8 Z6	X	-	9.259.027	25 26	std
-	**1.00**	540	16.9	290	51 36	1 1" 3/8 Z6	-	X	-	9.259.003	27 28	std
R	**1.46**	540	16.9	423	1 1" 3/8 Z6	1 1" 3/8 Z6	51 36	X	-	9.259.023	17 view from A	std

TB-27C

Code **267**

(1.04)

[kg] - | [l] -

Per configurazioni non a catalogo contattare Servizio Tecnico-Commerciale
For non-catalog configurations contact Technical-Commercial Service

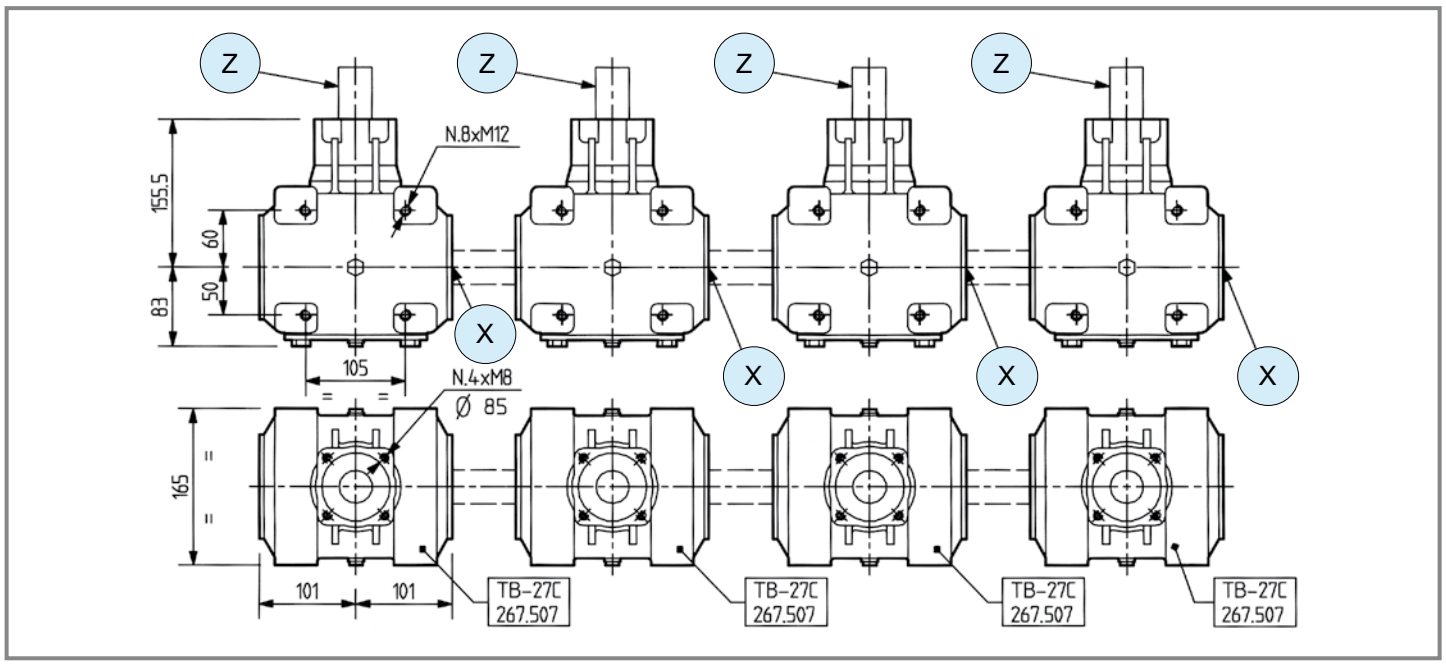

	i	N_1 [rpm]	P_1 [kW]	M_2 [Nm]	Shaft type X	Shaft type Y	Shaft type Z	Input	Features	Code	Mounting	
-	**1.00**	540	40.5	695	51	-	1	Z	-	9.267.507	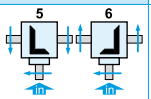	std
R	**1.46**	540	29.4	736	51	-	1 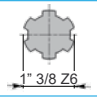	Z	-	9.267.538	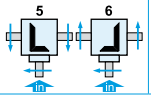	std

comer industries

N-2A

Code **699**

(1.04)

[kg] 19 | [l] 1.4

Per configurazioni non a catalogo contattare Servizio Tecnico-Commerciale
For non-catalog configurations contact Technical-Commercial Service

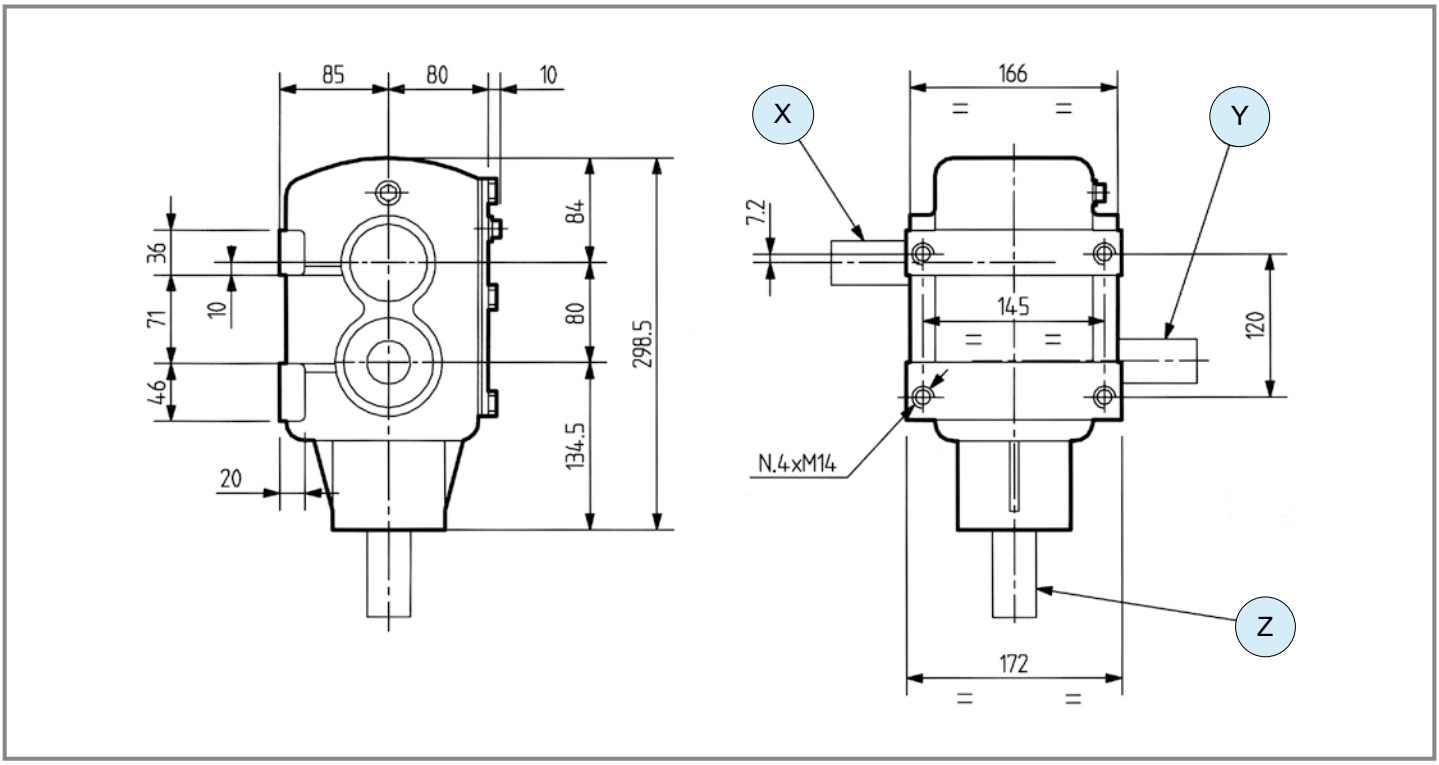

	i	N_1 [rpm]	P_1 [kW]	M_2 [Nm]	Shaft type X	Shaft type Y	Shaft type Z	Input	Features	Code	Mounting	
R	**5.67**	540	23.5	-	1 1" 3/8 Z6	1 1" 3/8 Z6	1 1" 3/8 Z6	Z	-	9.699.000	92	std

Spandiletame
Manure Spreaders

Per configurazioni non a catalogo contattare Servizio Tecnico-Commerciale
For non-catalog configurations contact Technical-Commercial Service

	i	$P_{1\text{ - max}}$ [kW]	$M_{2\text{ - max}}$ [Nm]	Tipologia alberi disponibili *Available type of shafts*	p.
A-649A	M + 3÷4.23	44	265	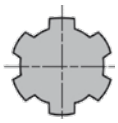 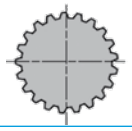	110
	- = = -				
	R + -				
A-640A	M + 3.82	55.9	252	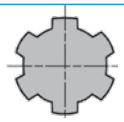 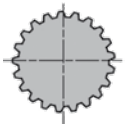	111
	- = = -				
	R + -				

A-649A

Code **649**

(1.05)

[kg]	25	[l]	-

Per configurazioni non a catalogo contattare Servizio Tecnico-Commerciale
For non-catalog configurations contact Technical-Commercial Service

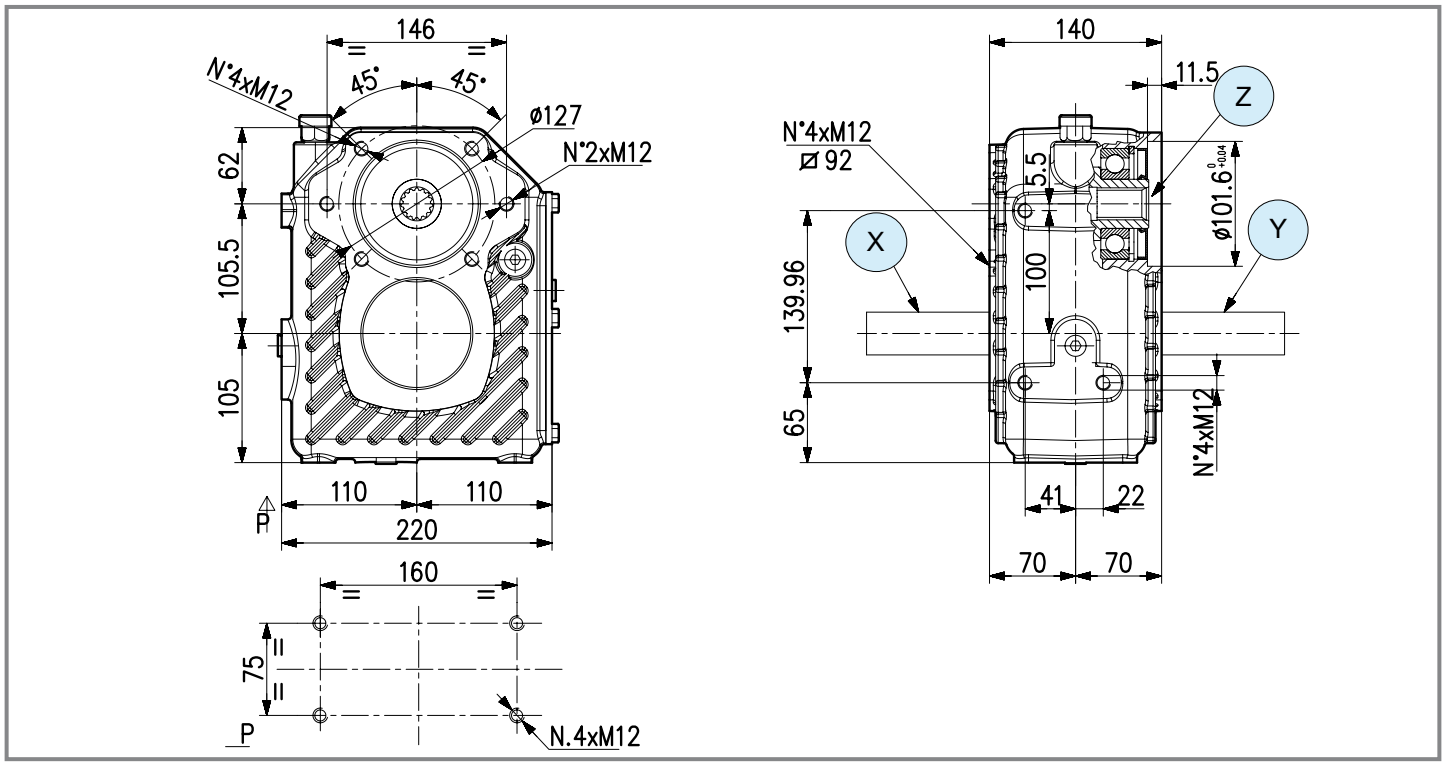

	i	N_1 [rpm]	P_1 [kW]	M_2 [Nm]	Shaft type X	Shaft type Y	Shaft type Z	Input	Flange	Code	Mounting	
M	**4.23**	540	40.4	172	1 — 1" 3/8 Z6	-	61 — 16/32" DP Z13	X	SAE-A/GR3	9.649.014	41 42	std
M	**4.23**	540	40.4	172	1 — 1" 3/8 Z6	60 — 16/32" DP Z9	62 — 16/32" DP Z15	X	SAE-B	9.649.010	43 44	std
M	**3.00**	540	44.0	265	1 — 1" 3/8 Z6	-	62 — 16/32" DP Z15	X	SAE-B	9.649.025	41 42	std
M	**3.00**	540	44.0	265	1 — 1" 3/8 Z6	-	61 — 16/32" DP Z13	X	SAE-B	9.649.005	41 42	std

A-640A

Code **640**

(1.05)

[kg] 42.5 | [l] -

Per configurazioni non a catalogo contattare Servizio Tecnico-Commerciale
For non-catalog configurations contact Technical-Commercial Service

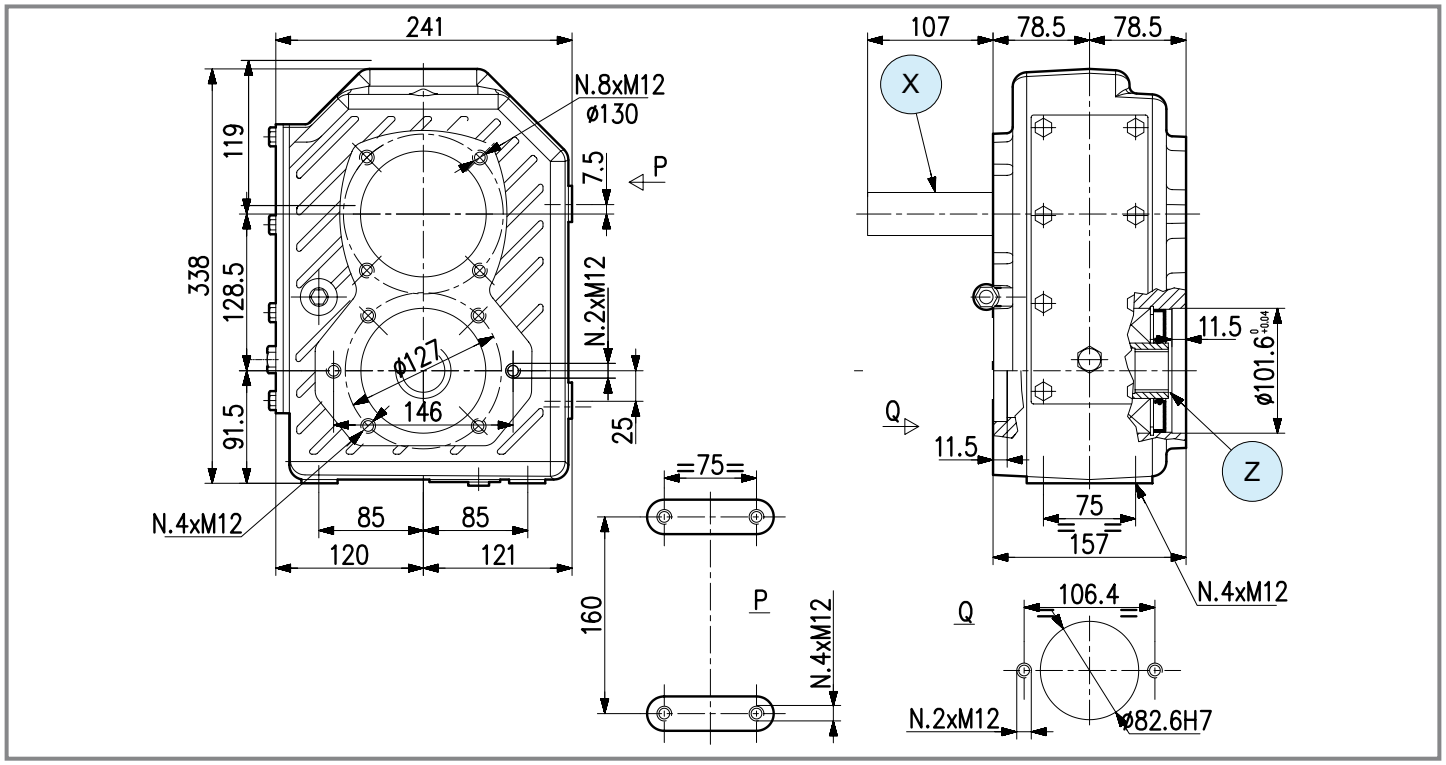

	i	N_1 [rpm]	P_1 [kW]	M_2 [Nm]	Shaft type X	Shaft type Y	Shaft type Z	Input	Flange	Code	Mounting	
M	**3.82**	540	55.9	252	1 — 1" 3/8 Z6	-	63 — 16/32" DP Z13	X	SAE-B	9.640.000	41 42	std

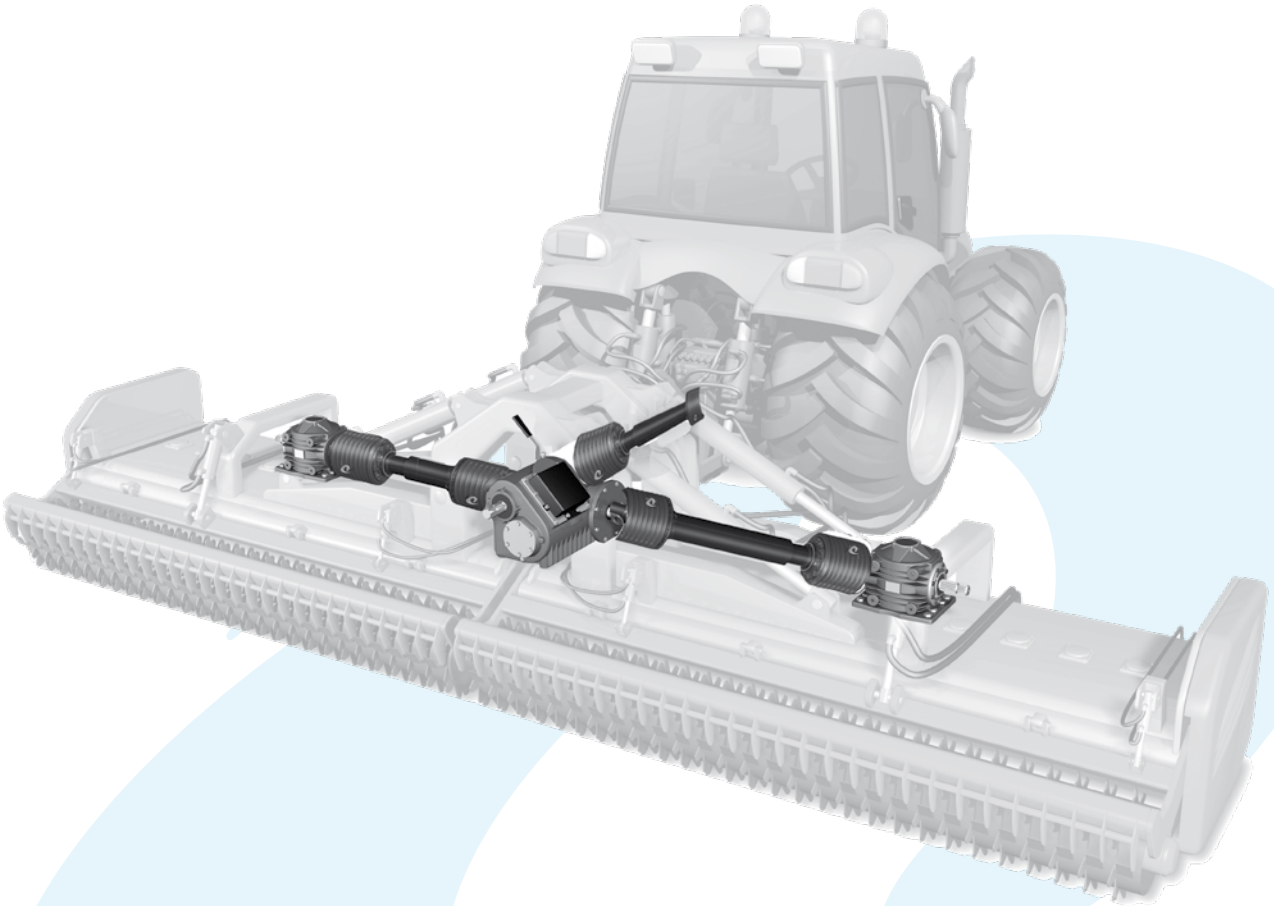

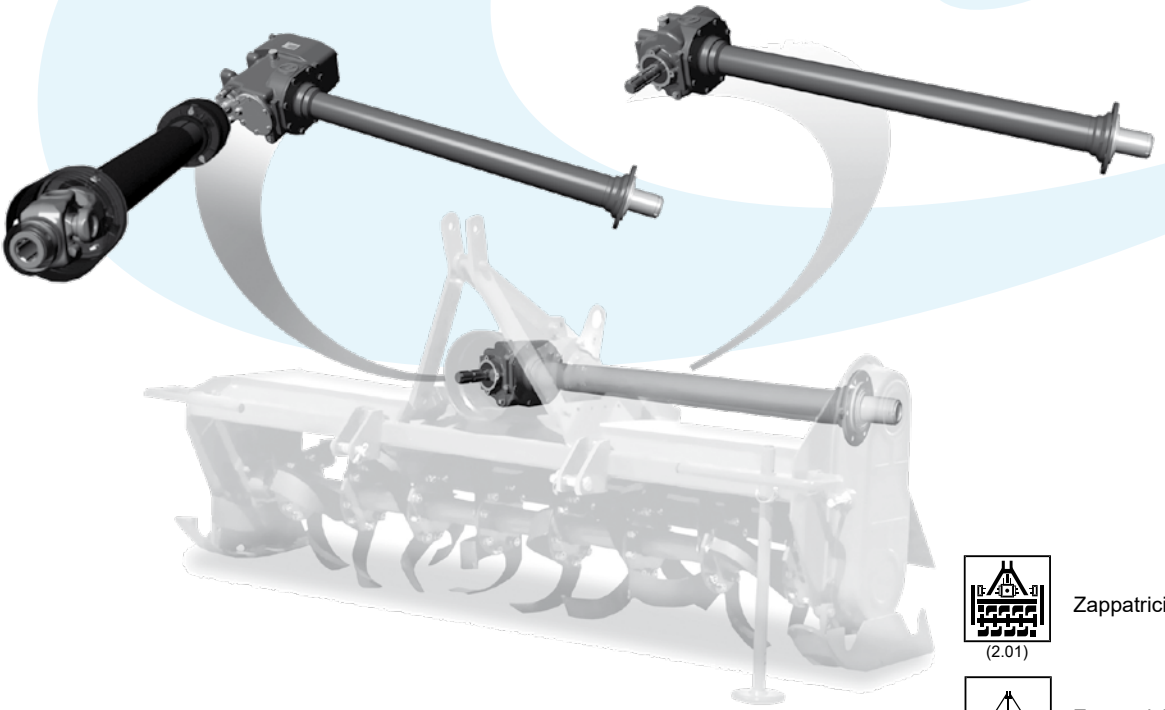

(2.01) Zappatrici - fresatrici / Rotary Tillers

(2.02) Zappatrici multiple / *Multiple Rotary Tillers*

(2.03) Erpici rotanti / *Rotary Harrows*

Per configurazioni non a catalogo contattare Servizio Tecnico-Commerciale
For non-catalog configurations contact Technical-Commercial Service

	i	$P_{1\text{ - max}}$ [kW]	$M_{2\text{ - max}}$ [Nm]	Tipologia alberi disponibili *Available type of shafts*	p.
TB-281J	M ⇨ + ⇨ - - ⇨ = ⇨ - R ⇨ + ⇨ 1.46	16.9	423	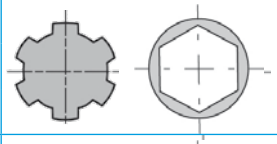	116
TB-19J	M ⇨ + ⇨ - - ⇨ = ⇨ - R ⇨ + ⇨ 1.46	16.9	423	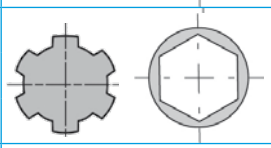	117
TB-27J **TB-27C**	M ⇨ + ⇨ - - ⇨ = ⇨ 1.00 R ⇨ + ⇨ 1.46÷1.90	40.5	736	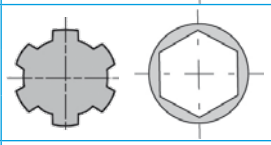	118
TB-278C	M ⇨ + ⇨ - - ⇨ = ⇨ 1.00 R ⇨ + ⇨ 1.60÷1.92	40.5	1090	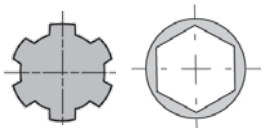	119
TB-22C	M ⇨ + ⇨ - - ⇨ = ⇨ - R ⇨ + ⇨ 1.60÷2.43	66.2	1999	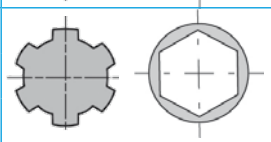	120
TLZ-21J	M ⇨ + ⇨ - - ⇨ = ⇨ - R ⇨ + ⇨ 1.46	29.4	736		121
TLZ-292A	M ⇨ + ⇨ - - ⇨ = ⇨ - R ⇨ + ⇨ 1.86	47.8	1525		122
MZ-1A	M ⇨ + ⇨ - - ⇨ = ⇨ - R ⇨ + ⇨ 1.55÷2.37	29.4	-	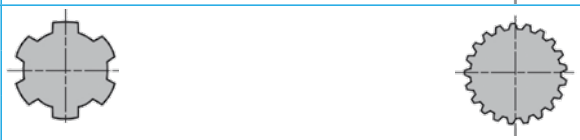	123
MZ-2A	M ⇨ + ⇨ - - ⇨ = ⇨ - R ⇨ + ⇨ 1.62÷2.64	51.5	-	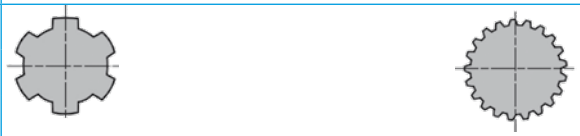	124
MZ-3A	M ⇨ + ⇨ - - ⇨ = ⇨ - R ⇨ + ⇨ 1.62÷2.64	80.9	-	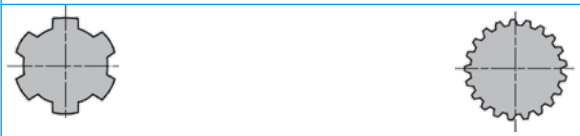	125
DZ-811F	M ⇨ + ⇨ - - ⇨ = ⇨ - R ⇨ + ⇨ 2.21÷2.73	51.5	-	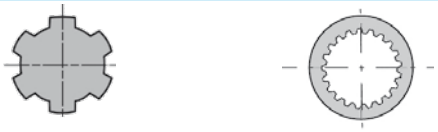	126
MZ-812F	M ⇨ + ⇨ - - ⇨ = ⇨ - R ⇨ + ⇨ 1.34÷3.19	51.5	-	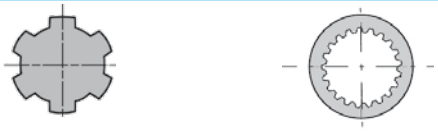	127
DZ-816F	M ⇨ + ⇨ - - ⇨ = ⇨ - R ⇨ + ⇨ 1.84÷2.48	70	-		128

	i	P_{1-max} [kW]	M_{2-max} [Nm]	Tipologia alberi disponibili *Available type of shafts*	p.
MZ-817F	M - - - R 1.80÷12.39	70	-		129
DZ-821F	M - - - R 2.44÷4.19	96	-		130
MZ-822F	M - - - R 1.34÷3.19	96	-		131
MZ-827F	M - - - R 1.16÷2.95	147	-		132
LTV-14F	M - - - R 1.92	29.5	965	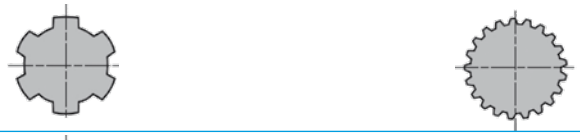	133
TV-274A	M - - - R 1.93	58.9	1947	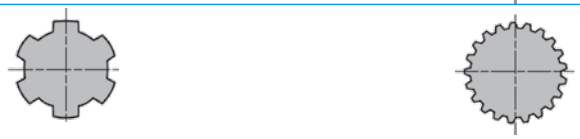	134
TV-301H	M - - - R 2.42	73.5	1947		135
DV-813F	M - - - R 1.34÷3.19	51.5	-		136
MV-814F	M - - - R 1.62÷2.65	51.5	-		137
MV-817F	M - - - R 1.15÷3.73	70	-		138
DV-818F	M - - - R 2.30÷3.08	70	-		139
MV-819F	M - - - R 2.44÷3.67	96	-		140
DV-823F	M - - - R 2.44÷4.20	96	-	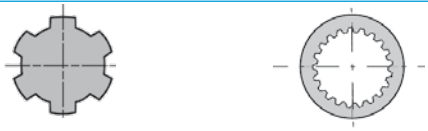	141

	i	$P_{1 - max}$ [kW]	$M_{2 - max}$ [Nm]	Tipologia alberi disponibili *Available type of shafts*	p.
MV-824F	M + - - = = - R + = 1.34÷3.20	96	-		142
DV-733F	M + - - = = - R + = 2.56÷2.98	132	-		143
MV-826F	M + - - = = - R + = 1.32÷3.35	147	-		144
D-825A	M + - - = = - R + = 1.07÷1.80	290	-	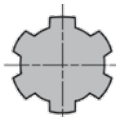	145

TB-281J

Code **281.8**

(2.02)

[kg] 7.5 | [l] 0.5

Per configurazioni non a catalogo contattare Servizio Tecnico-Commerciale
For non-catalog configurations contact Technical-Commercial Service

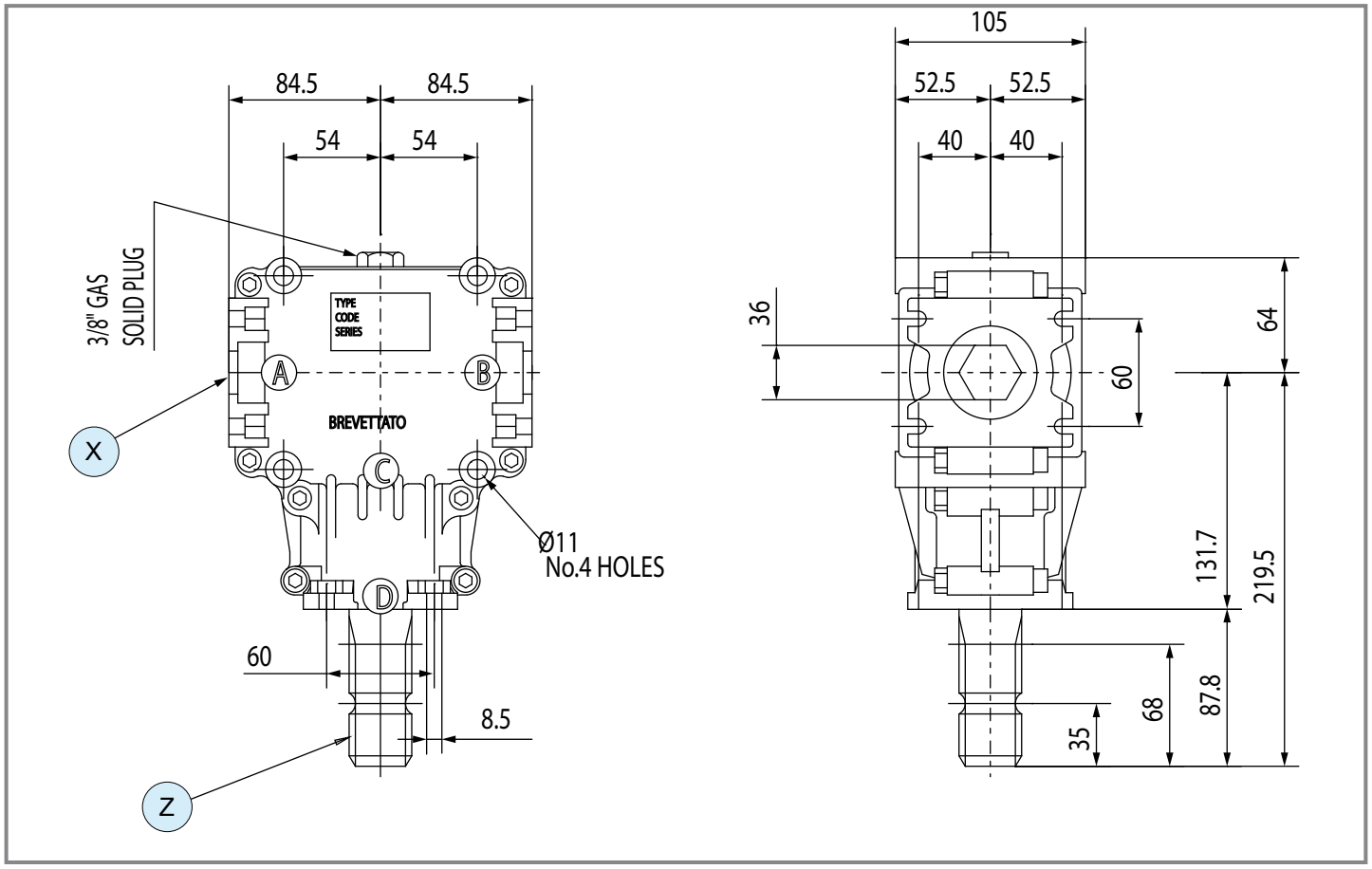

	i	N_1 [rpm]	P_1 [kW]	M_2 [Nm]	Shaft type X	Shaft type Y	Shaft type Z	Input	Lenght	Code	Mounting	
R	**1.46**	540	16.9	423	37 36	-	1 1" 3/8 Z6	Z	-	9.281.837	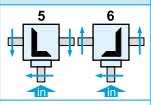	std
	1.46	540	16.9	423	36 30	-	1 1" 3/8 Z6	Z	-	9.281.864	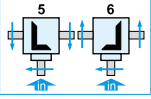	std

comer industries

TB-19J

Code **259.8**

(2.02)

[kg]	15

[l]	1

Per configurazioni non a catalogo contattare Servizio Tecnico-Commerciale
For non-catalog configurations contact Technical-Commercial Service

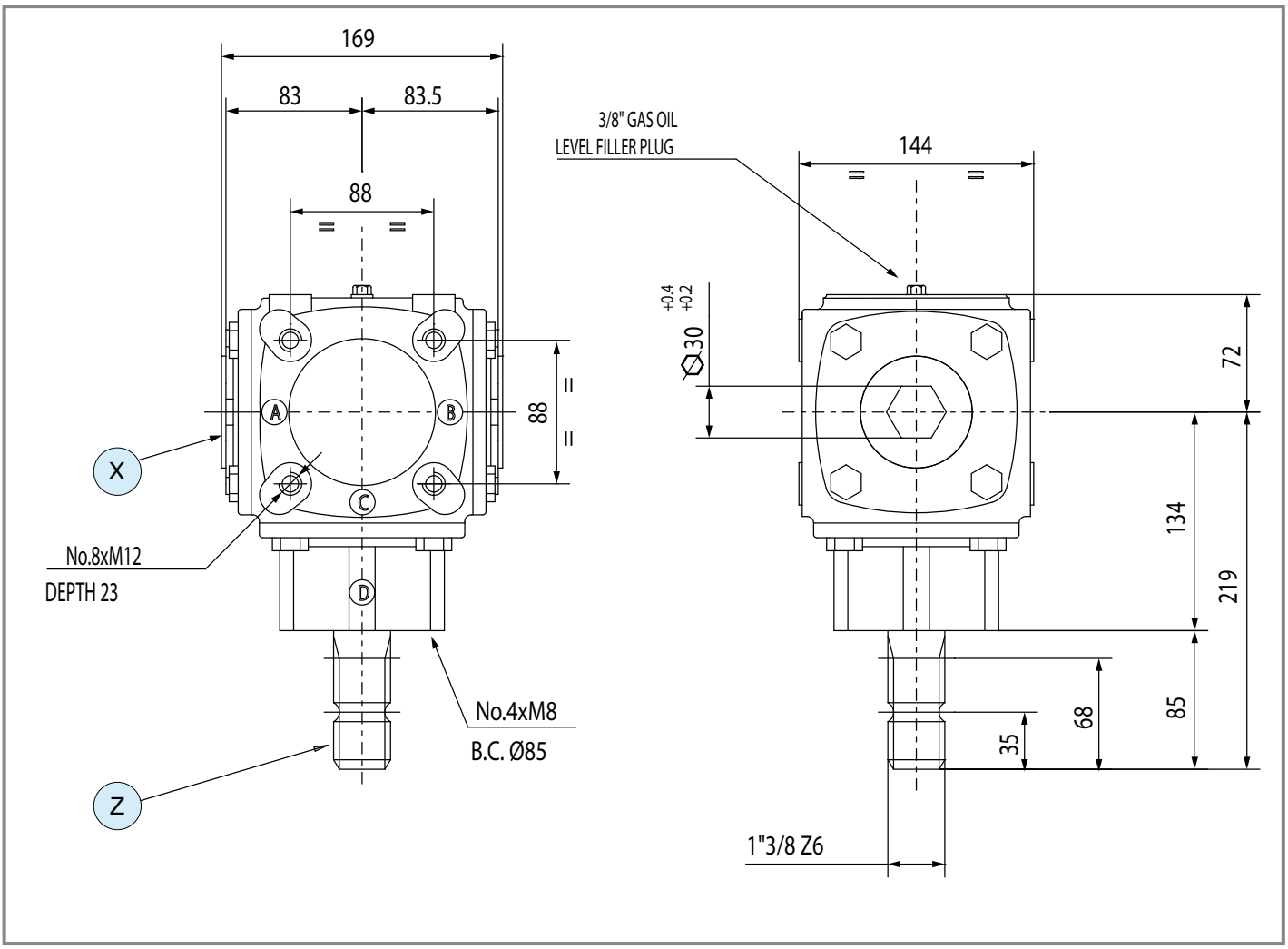

	i	N_1 [rpm]	P_1 [kW]	M_2 [Nm]	Shaft type X	Shaft type Y	Shaft type Z	Input	Lenght	Code	Mounting	
R	**1.46**	540	16.9	423	36 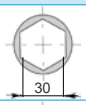 30	-	1 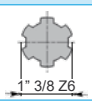 1" 3/8 Z6	Z	-	9.259.870	5 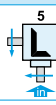 6 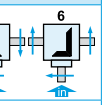	std
R	**1.46**	540	16.9	423	37 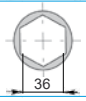 36	-	1 1" 3/8 Z6	Z	-	9.259.871	5 6 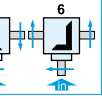	std

TB-27J | TB-27C

Code **267.8** | Code **267**

(2.02)

[kg]	22
[l]	1.1

Per configurazioni non a catalogo contattare Servizio Tecnico-Commerciale
For non-catalog configurations contact Technical-Commercial Service

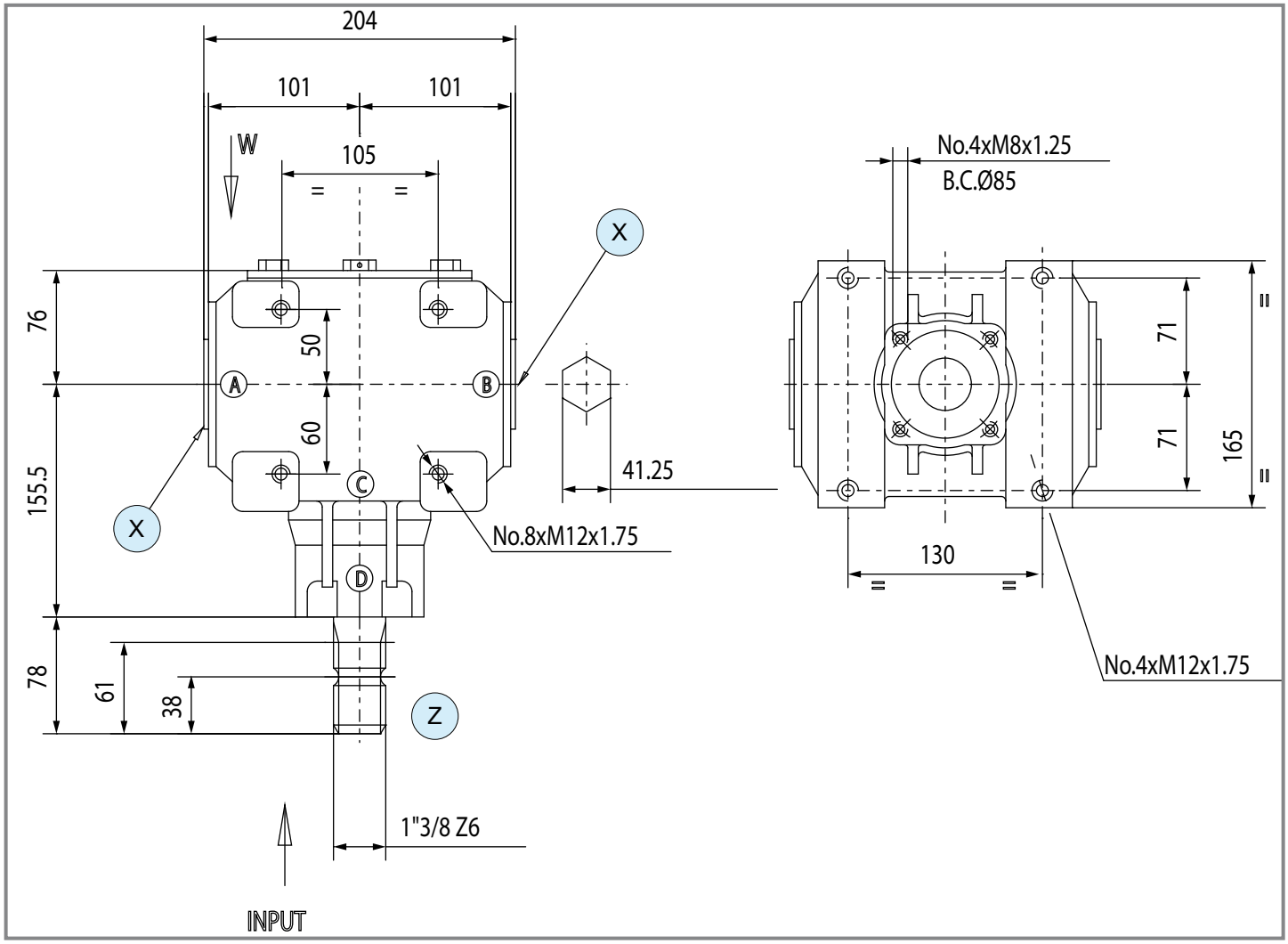

	i	N_1 [rpm]	P_1 [kW]	M_2 [Nm]	Shaft type X	Shaft type Y	Shaft type Z	Input	Lenght	Code	Mounting	
-	**1.00**	540	40.5	695	37 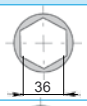 36	-	1 1" 3/8 Z6	Z	-	9.267.507	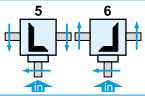	std
R	**1.46**	540	29.4	736	38 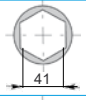 41	-	1 1" 3/8 Z6	Z	-	9.267.872	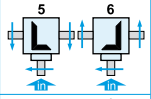	std
	1.90	540	16.2	528	38 41	-	1 1" 3/8 Z6	Z	-	9.267.004	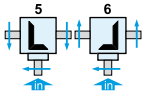	std

comer industries

TB-278C

Code **278**

(2.02)

[kg]	24

[l]	1.6

Per configurazioni non a catalogo contattare Servizio Tecnico-Commerciale
For non-catalog configurations contact Technical-Commercial Service

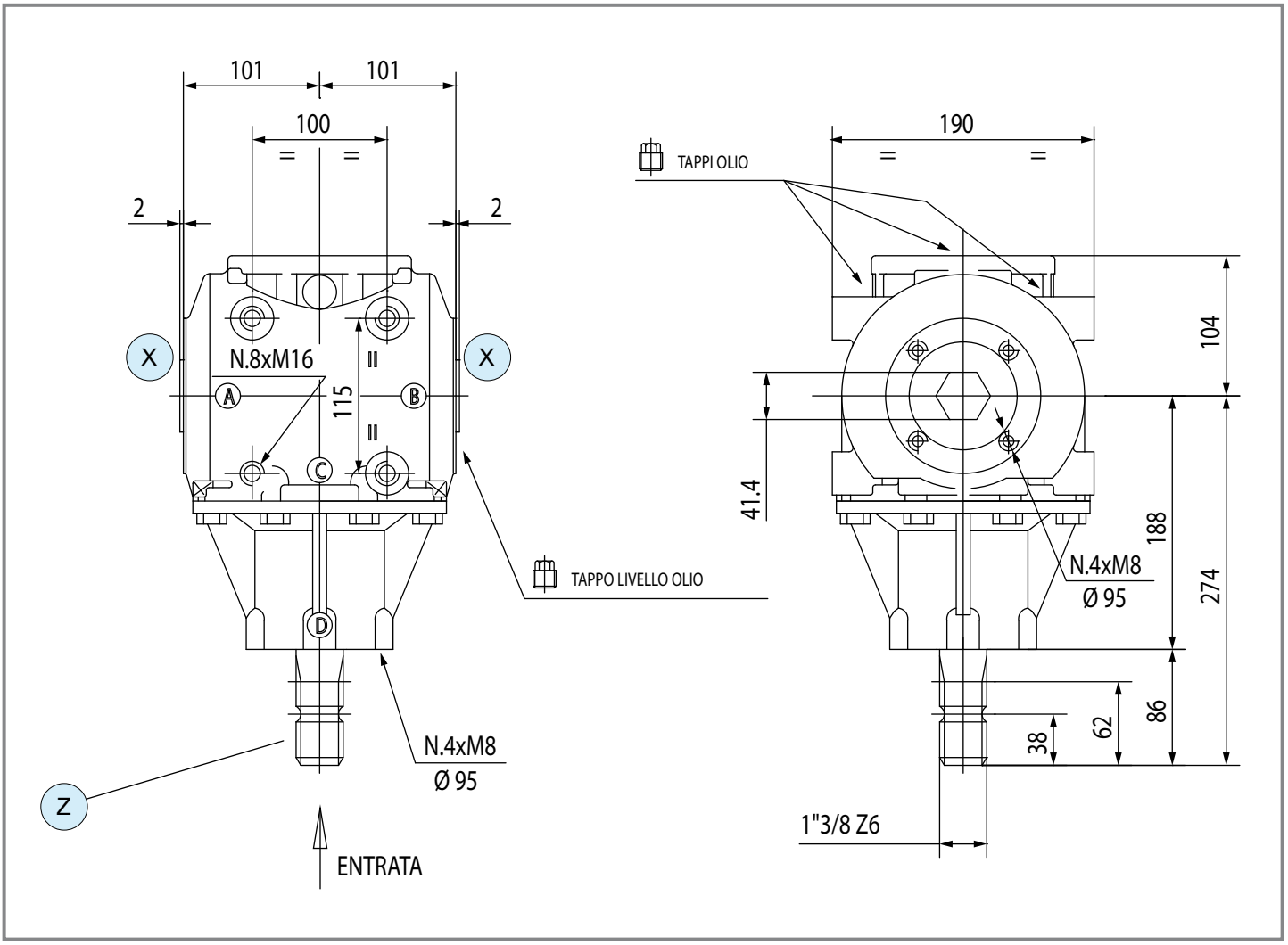

	i	N_1 [rpm]	P_1 [kW]	M_2 [Nm]	Shaft type X	Shaft type Y	Shaft type Z	Input	Lenght	Code	Mounting	
-	**1.00**	540	40.5	695	38 (41)	-	1 (1" 3/8 Z6)	Z	-	9.278.524	5 6	std
R	**1.60**	540	36.8	1010	37 (36)	-	1 (1" 3/8 Z6)	Z	-	9.278.018	5 6	std
	1.60	540	36.8	1010	38 (41)	-	1 (1" 3/8 Z6)	Z	-	9.278.019	5 6	std
	1.92	540	33.1	1090	37 (36)	-	1 (1" 3/8 Z6)	Z	-	9.278.020	5 6	std
	1.92	540	33.1	1090	38 (41)	-	1 (1" 3/8 Z6)	Z	-	9.278.021	5 6	std

TB-22C

Code **262**

(2.02)

[kg]	30

[l]	2.5

Per configurazioni non a catalogo contattare Servizio Tecnico-Commerciale
For non-catalog configurations contact Technical-Commercial Service

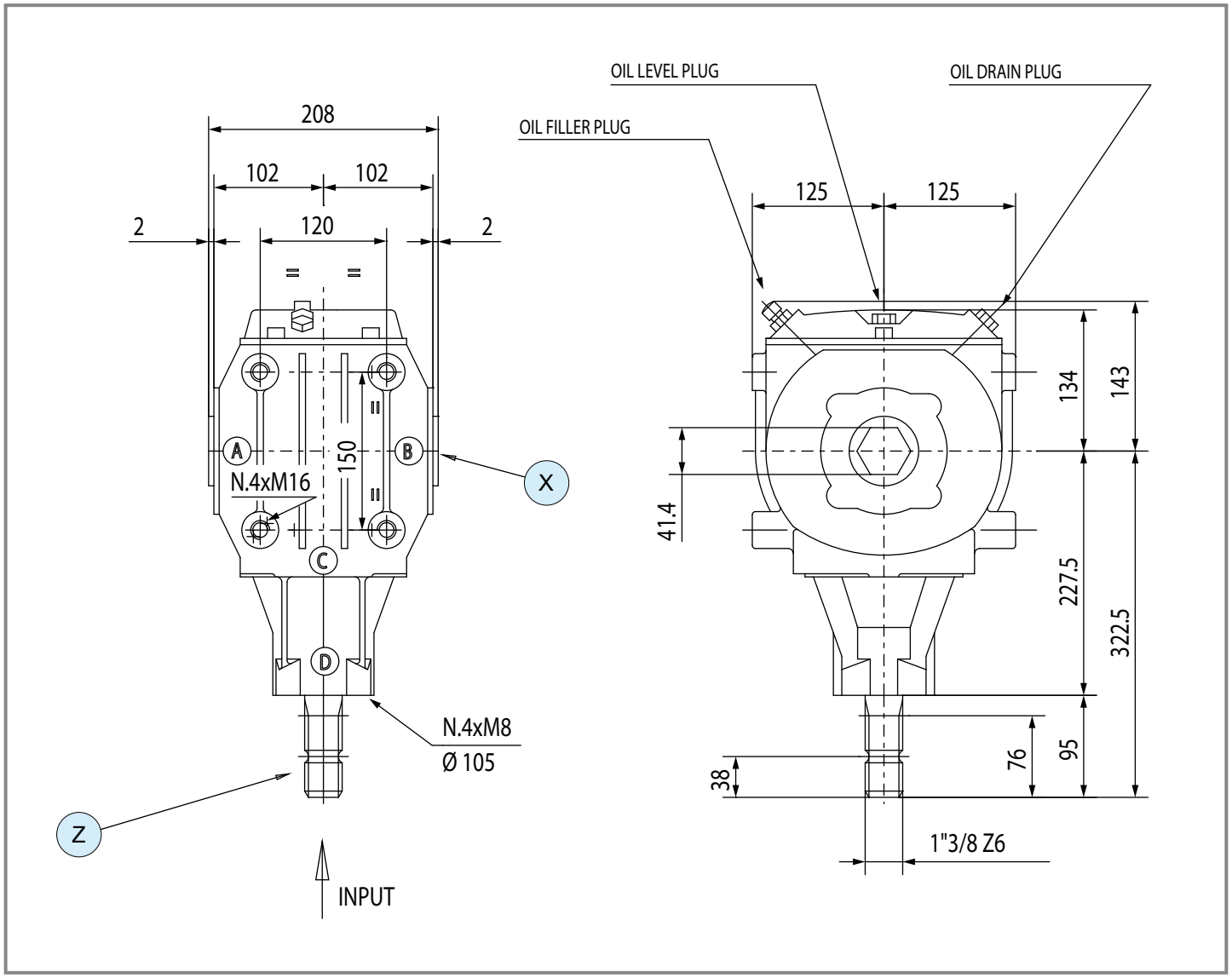

	i	N_1 [rpm]	P_1 [kW]	M_2 [Nm]	Shaft type X	Shaft type Y	Shaft type Z	Input	Lenght	Code	Mounting	
R	**1.60**	540	66.2	1817	38 41	-	1 1" 3/8 Z6	Z	-	9.262.504	5 6	std
	1.93	540	60.4	1999	39 50	-	1 1" 3/8 Z6	Z	-	9.262.013	5 6	std
	1.93	540	60.4	1999	38 41	-	1 1" 3/8 Z6	Z	-	9.262.015	5 6	std
	2.43	540	39.7	1655	39 50	-	1 1" 3/8 Z6	Z	-	9.262.012	5 6	std

comer industries

TLZ-21J

Code **261.8**

(2.01)

[kg]	23	[l]	-

Per configurazioni non a catalogo contattare Servizio Tecnico-Commerciale
For non-catalog configurations contact Technical-Commercial Service

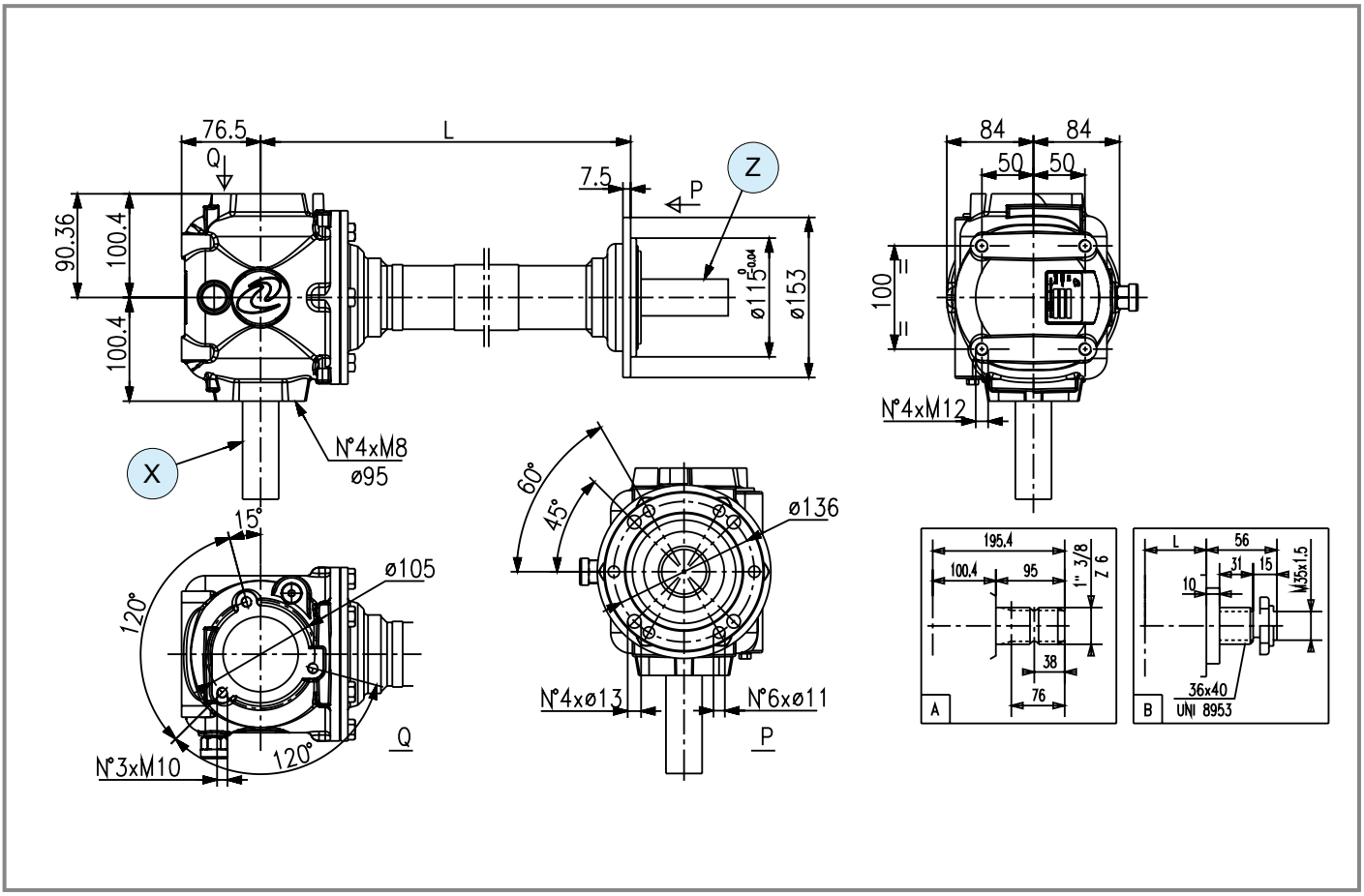

	i	N_1 [rpm]	P_1 [kW]	M_2 [Nm]	Shaft type X	Shaft type Y	Shaft type Z	Input	Lenght	Code	Mounting	
R	**1.46**	540	29.4	736	1 — 1" 3/8 Z6	-	7 — 36x40 DIN5482	X	400	9.261.819	7	std
	1.46	540	29.4	736	1 — 1" 3/8 Z6	-	7 — 36x40 DIN5482	X	500	9.261.811	7	std
	1.46	540	29.4	736	1 — 1" 3/8 Z6	-	7 — 36x40 DIN5482	X	600	9.261.812	7	std
	1.46	540	29.4	736	1 — 1" 3/8 Z6	-	7 — 36x40 DIN5482	X	700	9.261.813	7	std
	1.46	540	29.4	736	1 — 1" 3/8 Z6	-	7 — 36x40 DIN5482	X	800	9.261.814	7	std
	1.46	540	29.4	736	1 — 1" 3/8 Z6	-	7 — 36x40 DIN5482	X	900	9.261.810	7	std

TLZ-292A

Code **292**

(2.01)

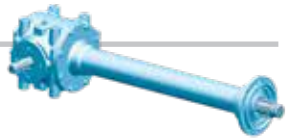

[kg] 49.5 | [l] -

Per configurazioni non a catalogo contattare Servizio Tecnico-Commerciale
For non-catalog configurations contact Technical-Commercial Service

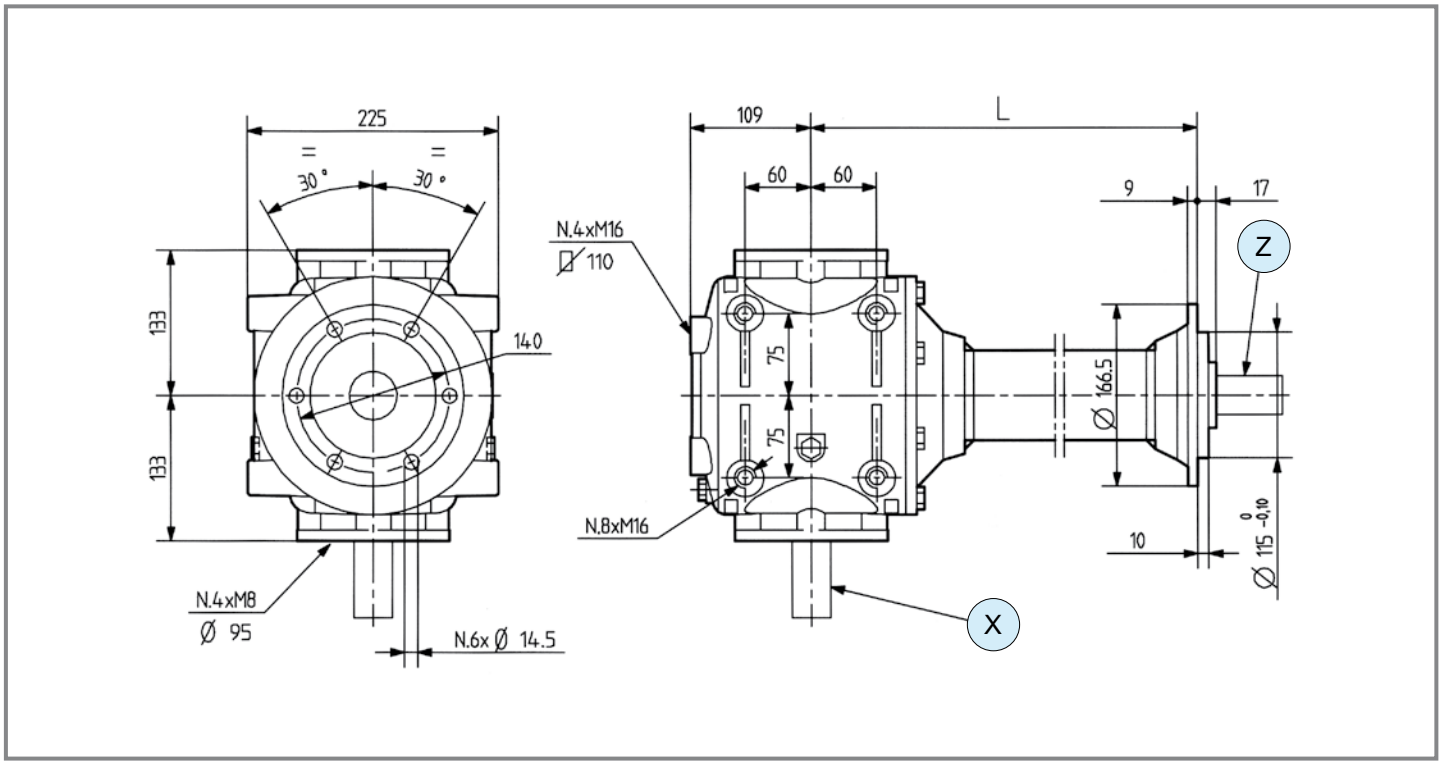

	i	N_1 [rpm]	P_1 [kW]	M_2 [Nm]	Shaft type X	Shaft type Y	Shaft type Z	Input	Lenght	Code	Mounting	
R	**1.86**	540	47.8	1525	1 — 1" 3/8 Z6	-	30 — 42x48 DIN5482	X	700	9.292.013	7 8	special
	1.86	540	47.8	1525	1 — 1" 3/8 Z6	-	30 — 42x48 DIN5482	X	800	9.292.008	7 8	special
	1.86	540	47.8	1525	1 — 1" 3/8 Z6	-	30 — 42x48 DIN5482	X	900	9.292.009	7 8	special
	1.86	540	47.8	1525	1 — 1" 3/8 Z6	-	30 — 42x48 DIN5482	X	1000	9.292.010	7 8	special
	1.86	540	47.8	1525	1 — 1" 3/8 Z6	-	30 — 42x48 DIN5482	X	1050	9.292.318	7 8	special
	1.86	540	47.8	1525	1 — 1" 3/8 Z6	-	30 — 42x48 DIN5482	X	1100	9.292.011	7 8	special
	1.86	540	47.8	1525	1 — 1" 3/8 Z6	-	30 — 42x48 DIN5482	X	1150	9.292.319	7 8	special

MZ-1A

Code **701**

(2.01)

[kg] 39.3 | [l] 2.5

Per configurazioni non a catalogo contattare Servizio Tecnico-Commerciale
For non-catalog configurations contact Technical-Commercial Service

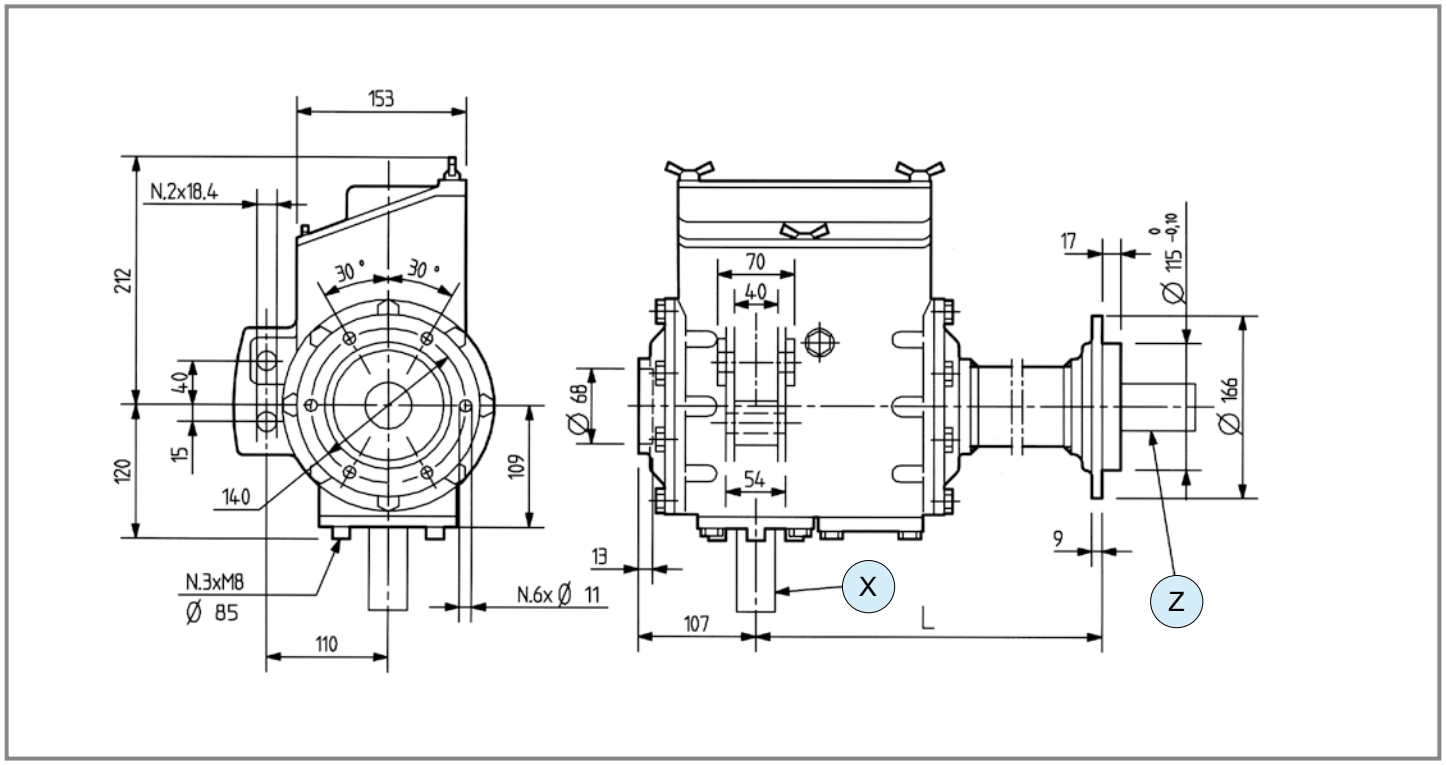

	i	N_1 [rpm]	P_1 [kW]	M_2 [Nm]	Shaft type X	Shaft type Y	Shaft type Z	Input	Lenght	Code	Mounting	
R	1.55 1.72 2.14 2.37	540	29.4	-	1 1" 3/8 Z6	-	31 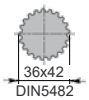 36x42 DIN5482	X	600	9.701.028	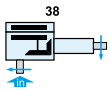	special
R	1.55 1.72 2.14 2.37	540	29.4	-	1 1" 3/8 Z6	-	31 36x42 DIN5482	X	700	9.701.000	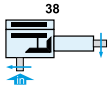	special
R	1.55 1.72 2.14 2.37	540	29.4	-	1 1" 3/8 Z6	-	31 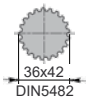 36x42 DIN5482	X	800	9.701.030	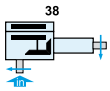	special
R	1.55 1.72 2.14 2.37	540	29.4	-	1 1" 3/8 Z6	-	31 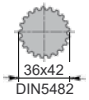 36x42 DIN5482	X	900	9.701.026	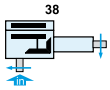	special

MZ-2A

Code **702**

(2.01)

[kg]	85	[l]	-

Per configurazioni non a catalogo contattare Servizio Tecnico-Commerciale
For non-catalog configurations contact Technical-Commercial Service

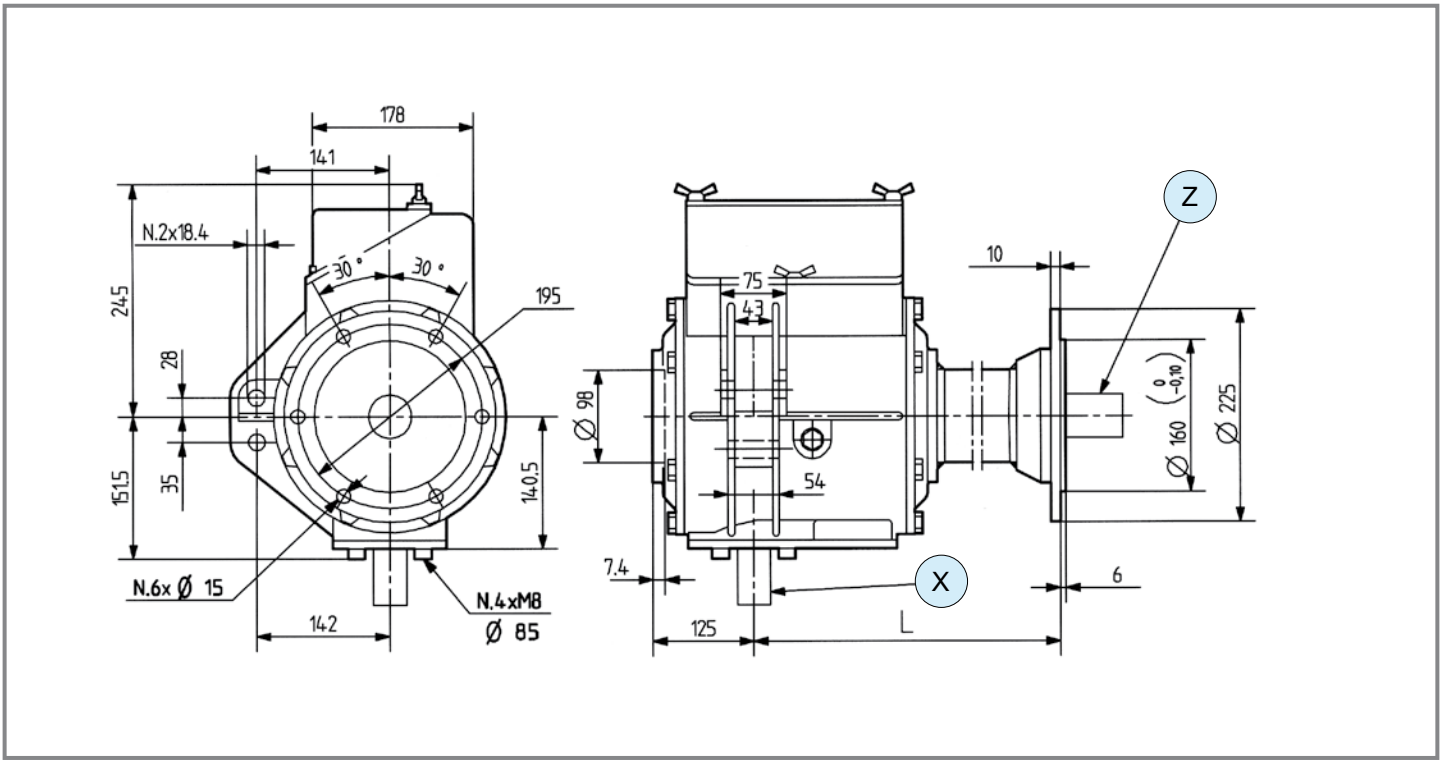

	i	N_1 [rpm]	P_1 [kW]	M_2 [Nm]	Shaft type X	Shaft type Y	Shaft type Z	Input	Lenght	Code	Mounting	
R	1.62 1.87 2.29 2.64	540	51.5	-	1 1" 3/8 Z6	-	32 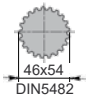 46x54 DIN5482	X	700	9.702.040	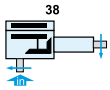	special
	1.62 1.87 2.29 2.64	540	51.5	-	1 1" 3/8 Z6	-	32 46x54 DIN5482	X	800	9.702.048	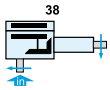	special
	1.62 1.87 2.29 2.64	540	51.5	-	1 1" 3/8 Z6	-	32 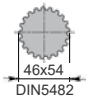 46x54 DIN5482	X	900	9.702.001	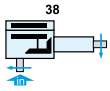	special
	1.62 1.87 2.29 2.64	540	51.5	-	1 1" 3/8 Z6	-	32 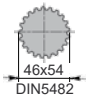 46x54 DIN5482	X	1000	9.702.049	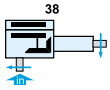	special
	1.62 1.87 2.29 2.64	540	51.5	-	1 1" 3/8 Z6	-	32 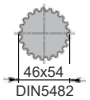 46x54 DIN5482	X	1100	9.702.051	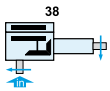	special

comer industries

MZ-3A

Code **703**

(2.01)

[kg] 122 | [l] -

Per configurazioni non a catalogo contattare Servizio Tecnico-Commerciale
For non-catalog configurations contact Technical-Commercial Service

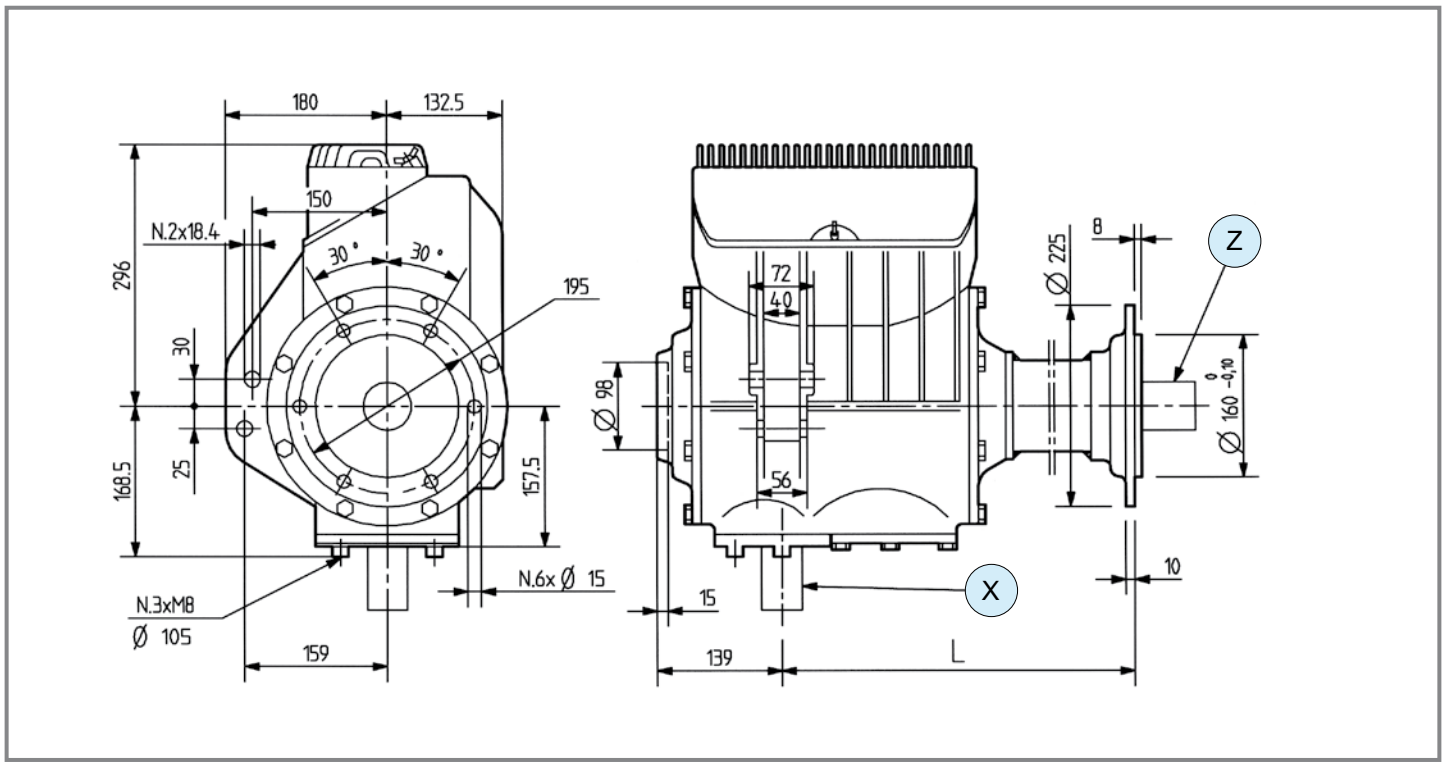

	i	N_1 [rpm]	P_1 [kW]	M_2 [Nm]	Shaft type X	Shaft type Y	Shaft type Z	Input	Lenght	Code	Mounting	
R	1.40 1.56 2.96 3.30	1000	80.9	-	5 1" 3/4 Z6	-	32 46x54 DIN5482	X	1250	9.703.039	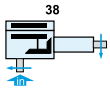 38	special
	1.56 1.74 2.66 2.96	540	80.9	-	5 1" 3/4 Z6	-	32 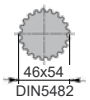 46x54 DIN5482	X	1150	9.703.042	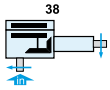 38	special
	1.56 1.74 2.66 2.96	540	80.9	-	5 1" 3/4 Z6	-	32 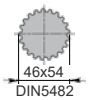 46x54 DIN5482	X	1250	9.703.044	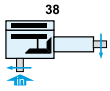 38	special
	1.56 1.74 2.66 2.96	540	80.9	-	5 1" 3/4 Z6	-	32 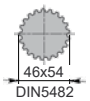 46x54 DIN5482	X	1350	9.703.047	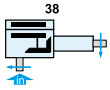 38	special
	1.56 1.74 2.66 2.96	540	80.9	-	5 1" 3/4 Z6	-	32 46x54 DIN5482	X	1500	9.703.048	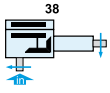 38	special

DZ-811F

Code **811**

(2.01)

[kg] 22.8 | [l] -

Per configurazioni non a catalogo contattare Servizio Tecnico-Commerciale
For non-catalog configurations contact Technical-Commercial Service

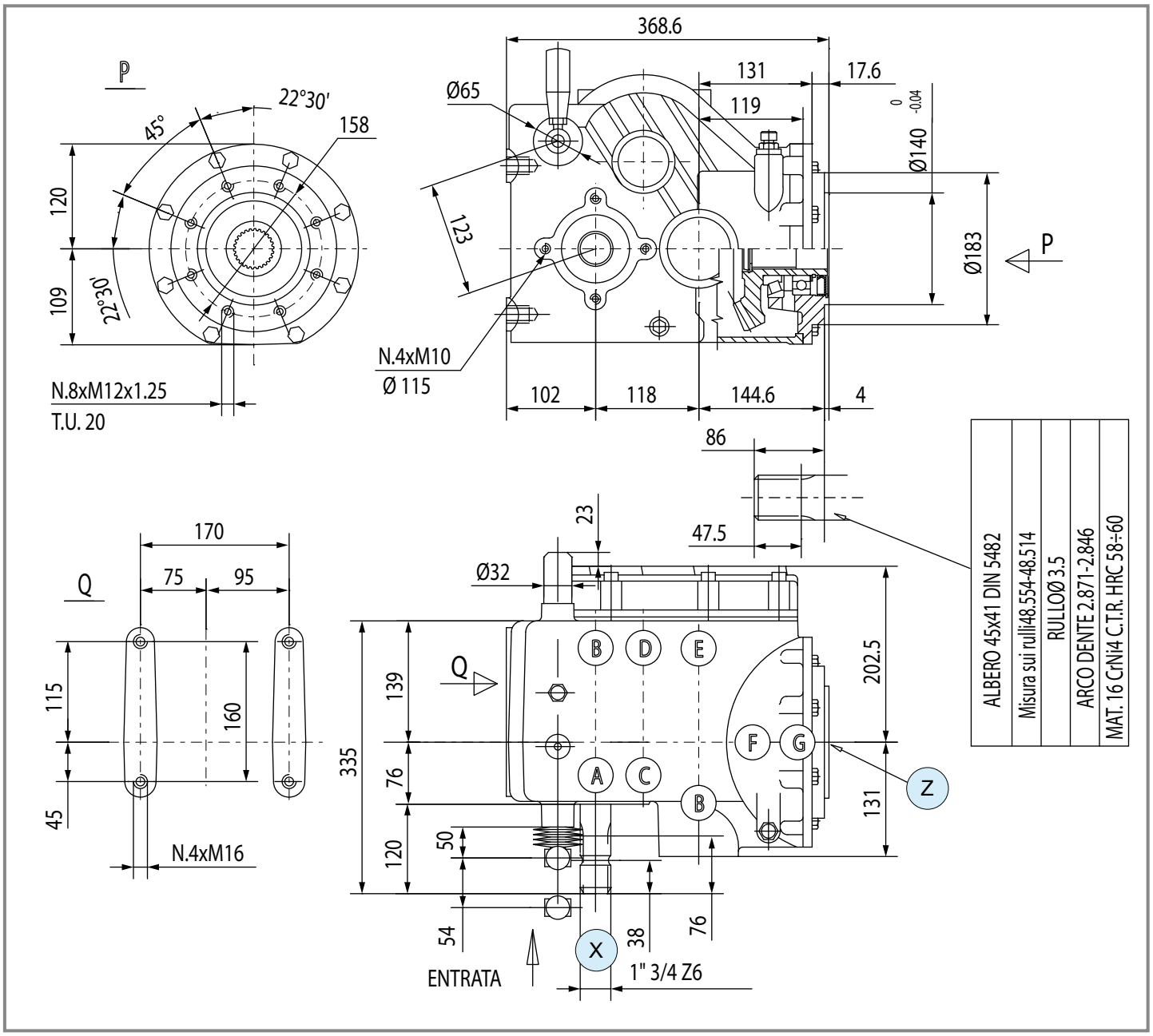

	i	N_1 [rpm]	P_1 [kW]	M_2 [Nm]	Shaft type X	Shaft type Y	Shaft type Z	Input	Lenght	Code	Mounting	
R	2.21 2.75	540	51.5	-	5 1" 3/4 Z6	-	40 41x45 DIN5482	X	-	9.811.700	227	special

comer industries

MZ-812F

Code **812**

(2.01)

[kg]	69.4	[l]	-

Per configurazioni non a catalogo contattare Servizio Tecnico-Commerciale
For non-catalog configurations contact Technical-Commercial Service

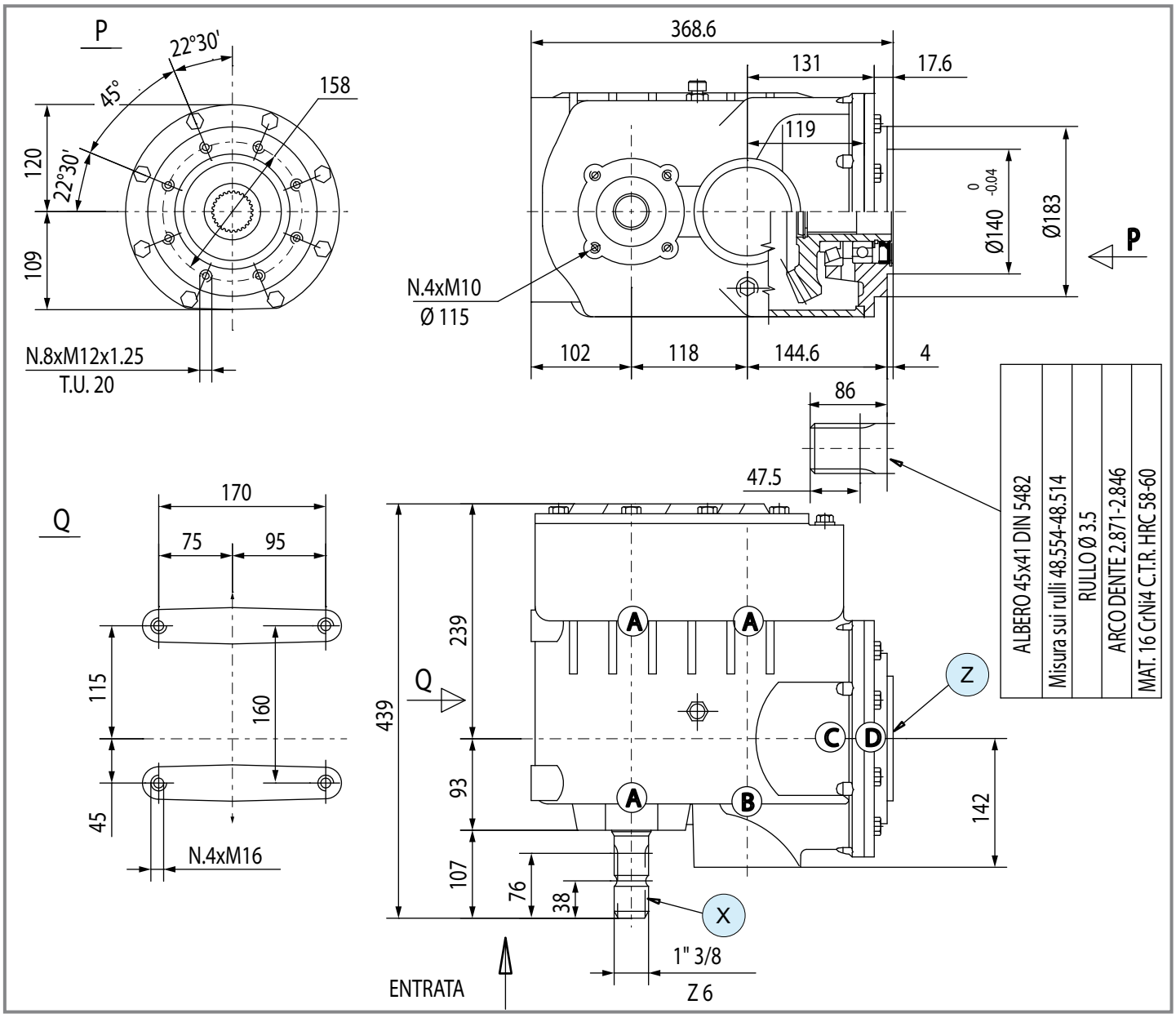

	i	N_1 [rpm]	P_1 [kW]	M_2 [Nm]	Shaft type X	Shaft type Y	Shaft type Z	Input	Lenght	Code	Mounting	
R	3.19 1.34	540	51.5	-	1 1" 3/8 Z6	-	40 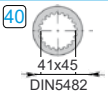 41x45 DIN5482	X	-	9.812.701	38 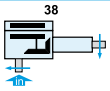	special

DZ-816F

Code **816**

(2.01)

[kg] 154 | [l] -

Per configurazioni non a catalogo contattare Servizio Tecnico-Commerciale
For non-catalog configurations contact Technical-Commercial Service

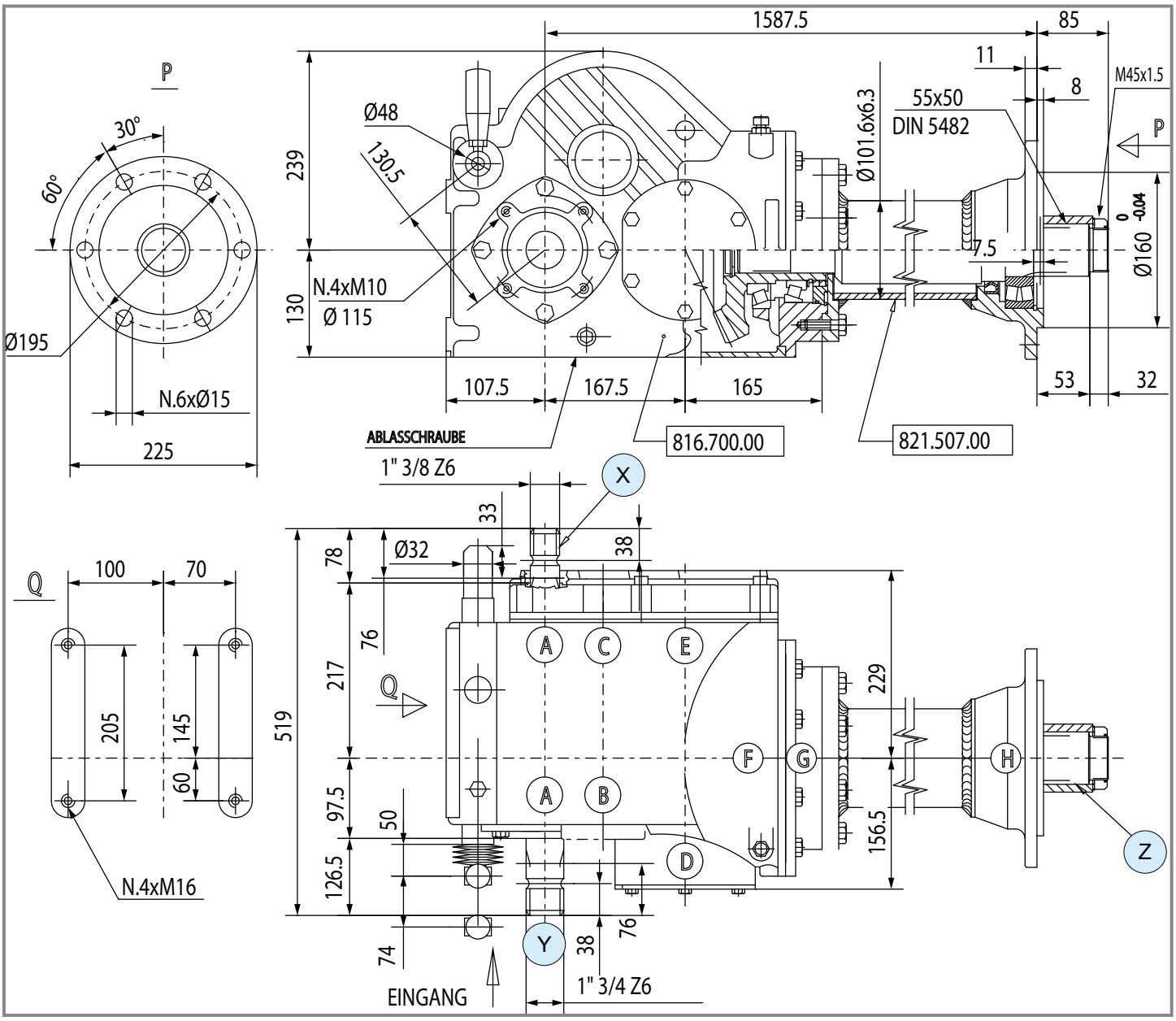

	i	N_1 [rpm]	P_1 [kW]	M_2 [Nm]	Shaft type X	Shaft type Y	Shaft type Z	Input	Leght	Code	Mounting	
R	2.66 3.08 3.57	1000	70.0	-	1 — 1" 3/8 Z6	5 — 1" 3/4 Z6	41 — 50x55 DIN5482	Y	-	-	38	special

comer industries

MZ-817F

Code **817**

(2.01)

[kg] 100 | [l] -

Per configurazioni non a catalogo contattare Servizio Tecnico-Commerciale
For non-catalog configurations contact Technical-Commercial Service

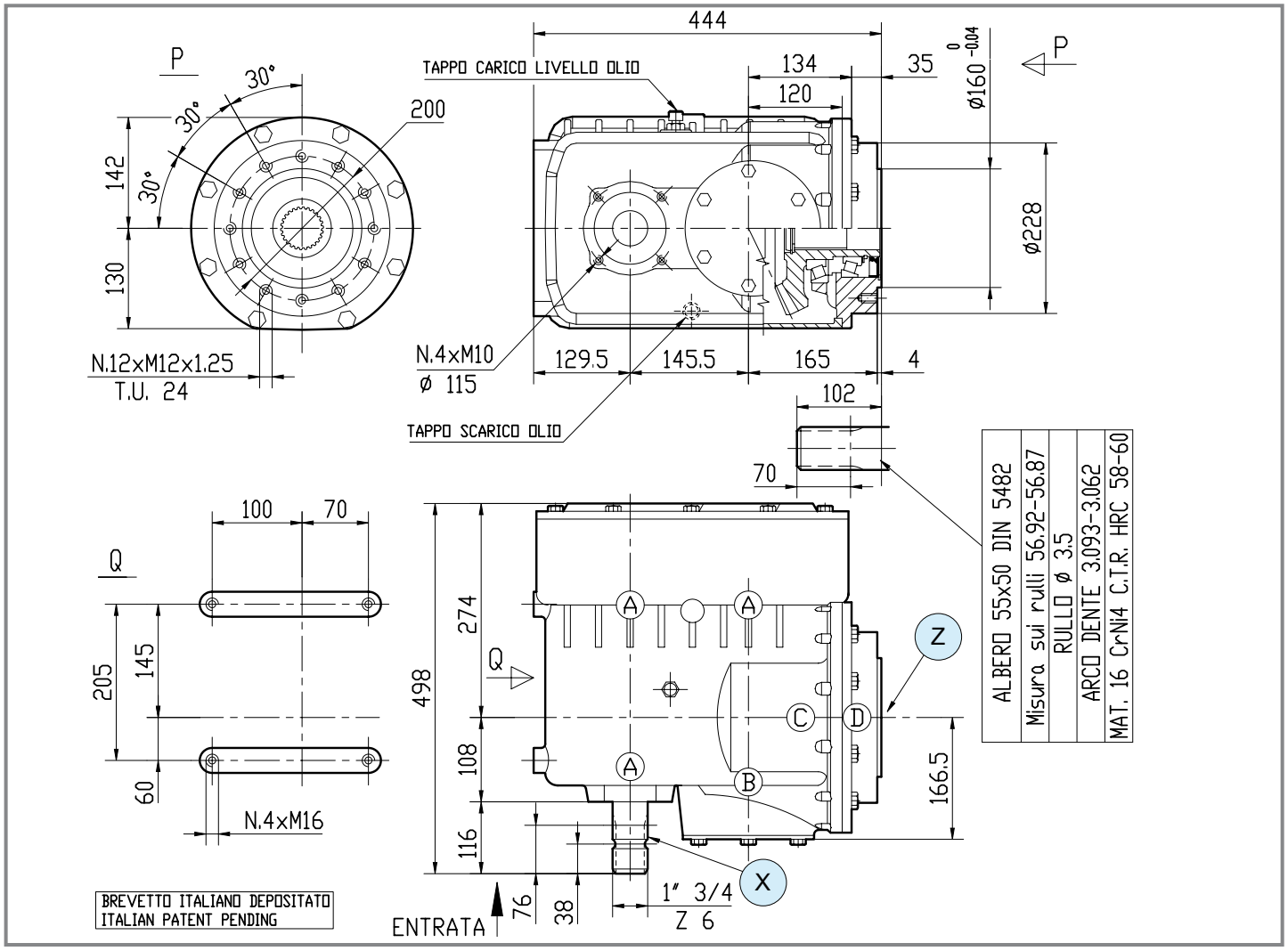

	i	N_1 [rpm]	P_1 [kW]	M_2 [Nm]	Shaft type X	Shaft type Y	Shaft type Z	Input	Lenght	Code	Mounting	
R	**1.80** **2.39**	1000	70.0	-	5 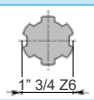 1" 3/4 Z6	-	41 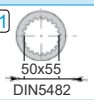 50x55 DIN5482	X	1250	9.817.702	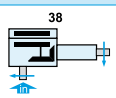	special

DZ-821F

Code **821**

(2.01)

[kg] 146.7 | [l] -

Per configurazioni non a catalogo contattare Servizio Tecnico-Commerciale
For non-catalog configurations contact Technical-Commercial Service

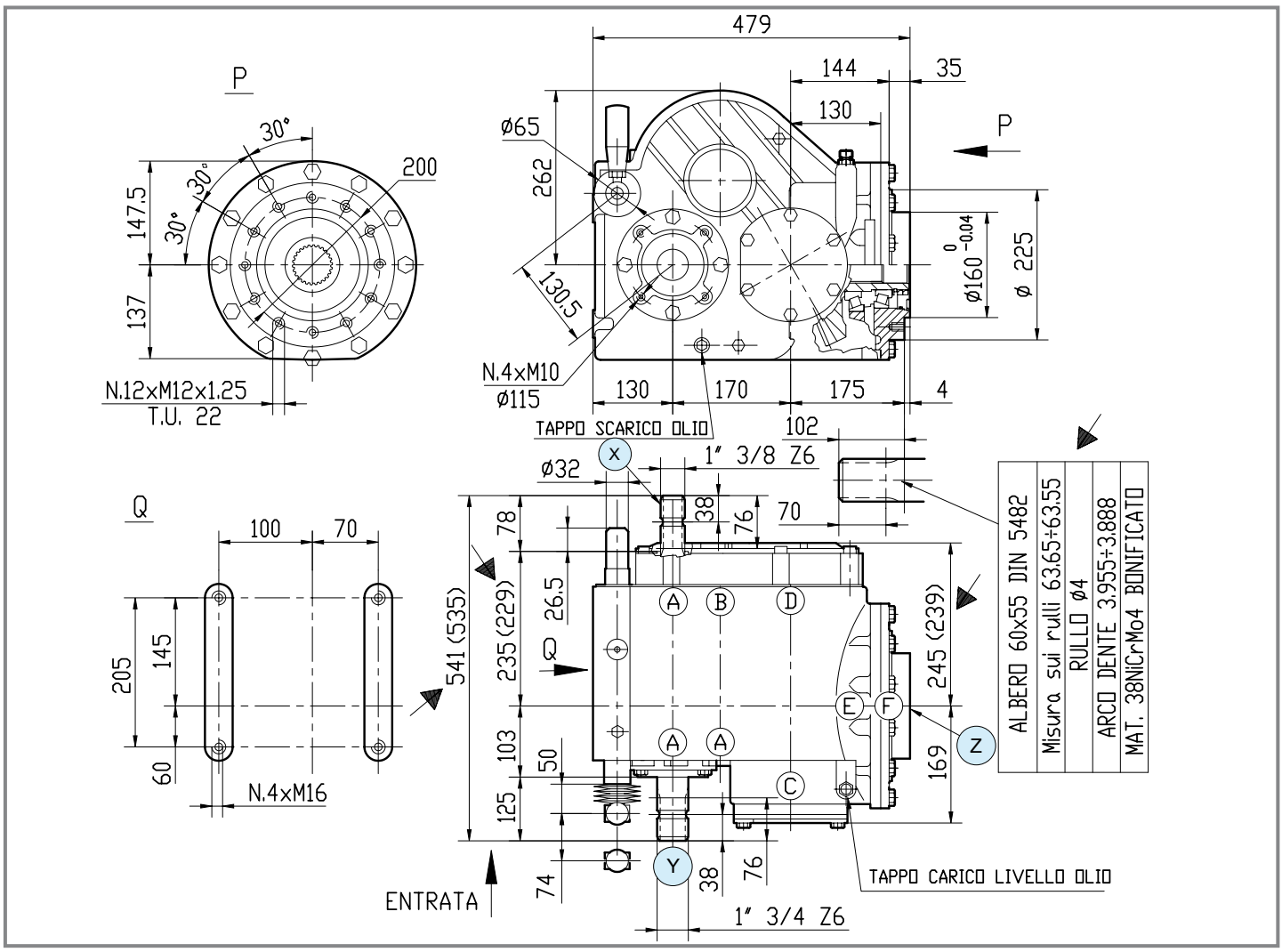

	i	N_1 [rpm]	P_1 [kW]	M_2 [Nm]	Shaft type X	Shaft type Y	Shaft type Z	Input	Lenght	Code	Mounting	
R	**2.44** **2.98** **3.67**	1000	96.0	-	1 1" 3/8 Z6	5 1" 3/4 Z6	41 50x55 DIN5482	Y	-	9.821.751	38 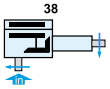	special
	2.78 **3.41** **4.19**	1000	96.0	-	1 1" 3/8 Z6	5 1" 3/4 Z6	41 50x55 DIN5482	Y	-	-	-	special

comer industries

MZ-822F

Code **822**

(2.01)

[kg]	112.8	[l]	-

Per configurazioni non a catalogo contattare Servizio Tecnico-Commerciale
For non-catalog configurations contact Technical-Commercial Service

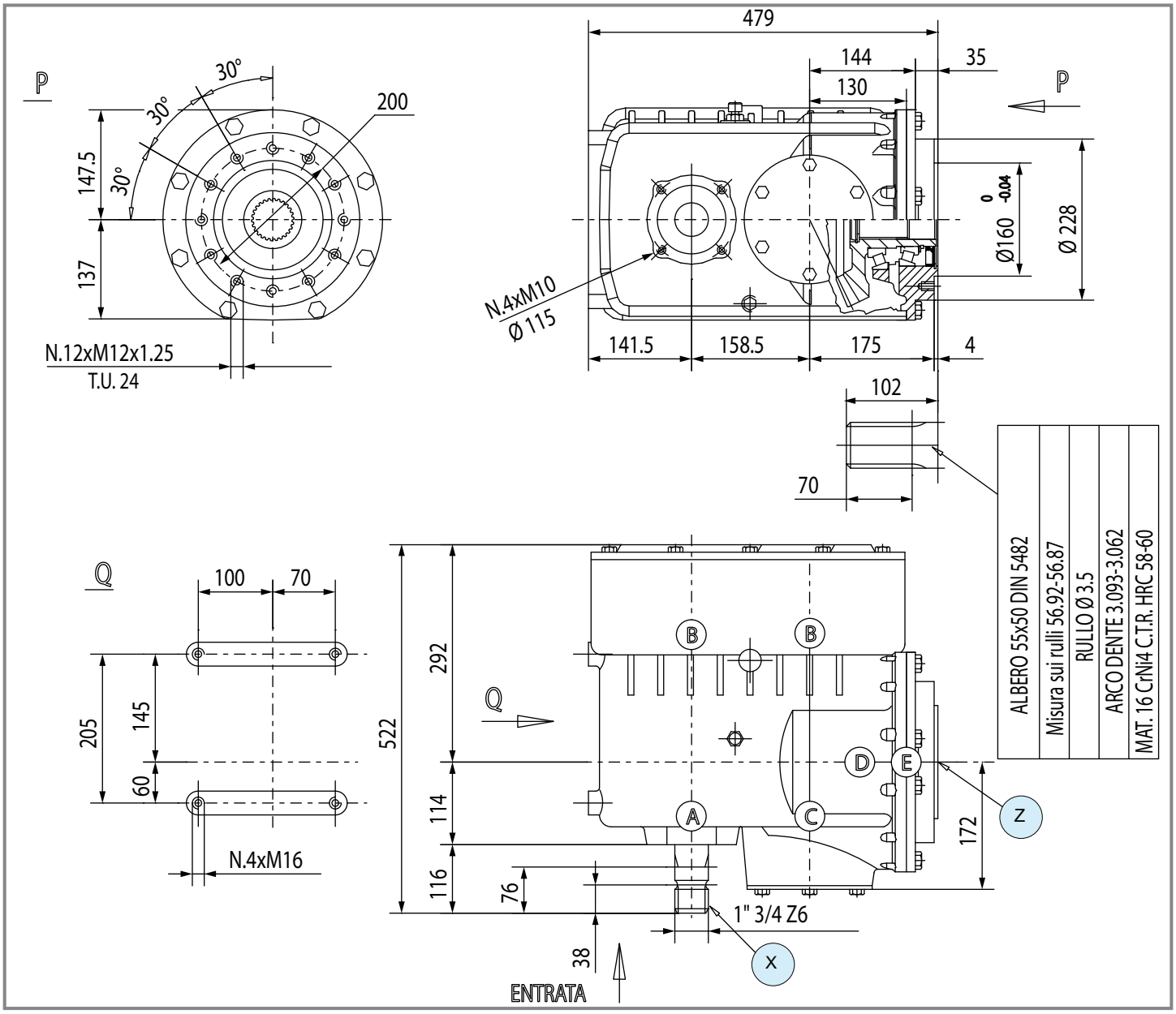

	i	N_1 [rpm]	P_1 [kW]	M_2 [Nm]	Shaft type X	Shaft type Y	Shaft type Z	Input	Lenght	Code	Mounting	
R	**2.98** **1.44**	1000	96.0	-	5 1" 3/4 Z6	-	41 50x55 DIN5482	X	-	-	-	special
	3.19 **1.34**	1000	96.0	-	5 1" 3/4 Z6	-	41 50x55 DIN5482	X	-	9.822.700	38 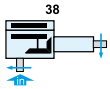	special

MZ-827F

Code **827**

(2.01)

[kg] 103 | [l] -

Per configurazioni non a catalogo contattare Servizio Tecnico-Commerciale
For non-catalog configurations contact Technical-Commercial Service

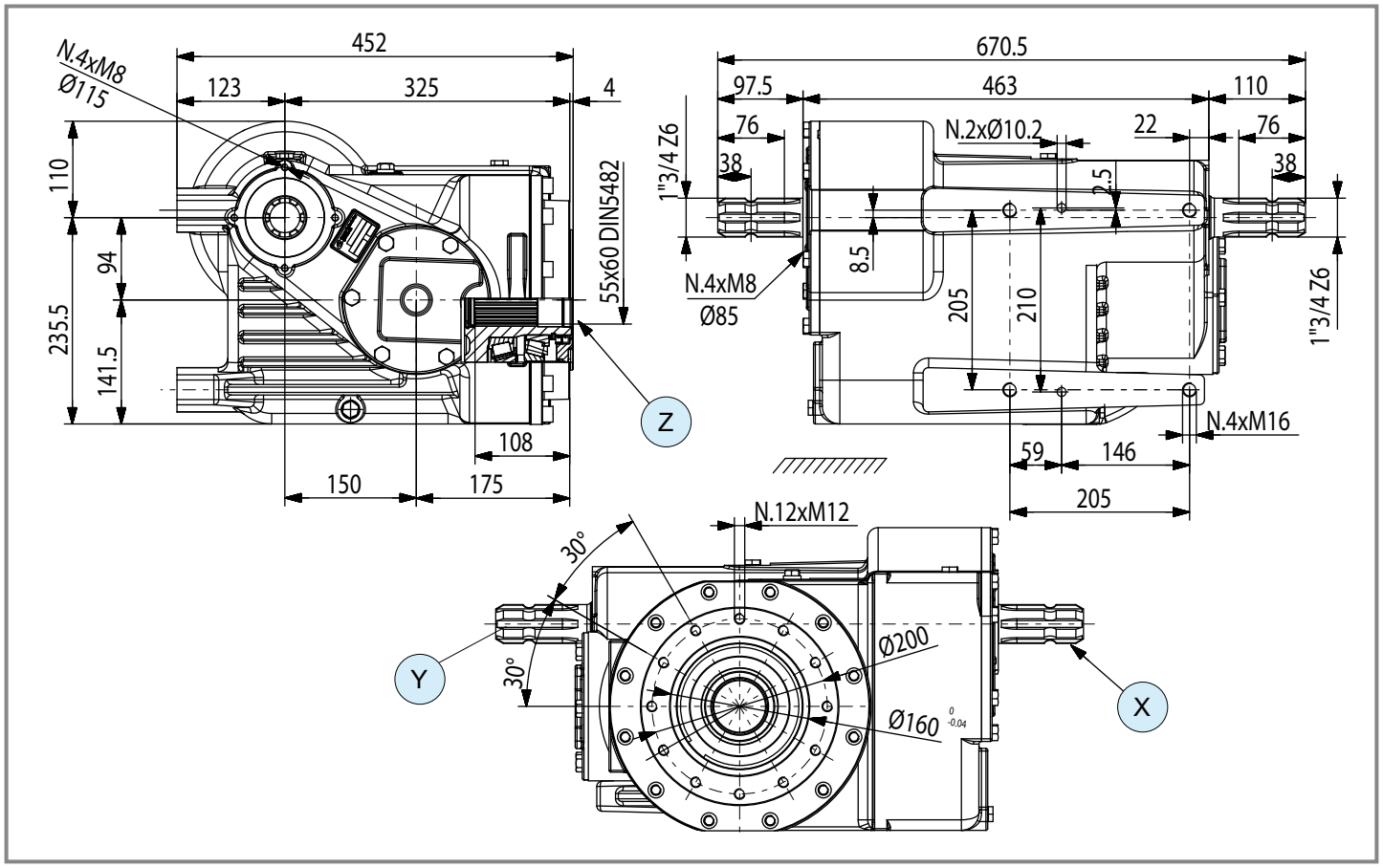

	i	N_1 [rpm]	P_1 [kW]	M_2 [Nm]	Shaft type X	Shaft type Y	Shaft type Z	Input	Lenght	Code	Mounting	
R	**2.95** **1.16**	1000	147.0	-	5 1" 3/4 Z6	5 1" 3/4 Z6	42 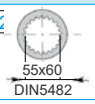 55x60 DIN5482	Y	-	9.827.001	38 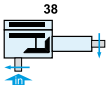	special

comer industries

LTV-14F

Code **113**

(2.03)

[kg] 31 | [l] 1.15

Per configurazioni non a catalogo contattare Servizio Tecnico-Commerciale
For non-catalog configurations contact Technical-Commercial Service

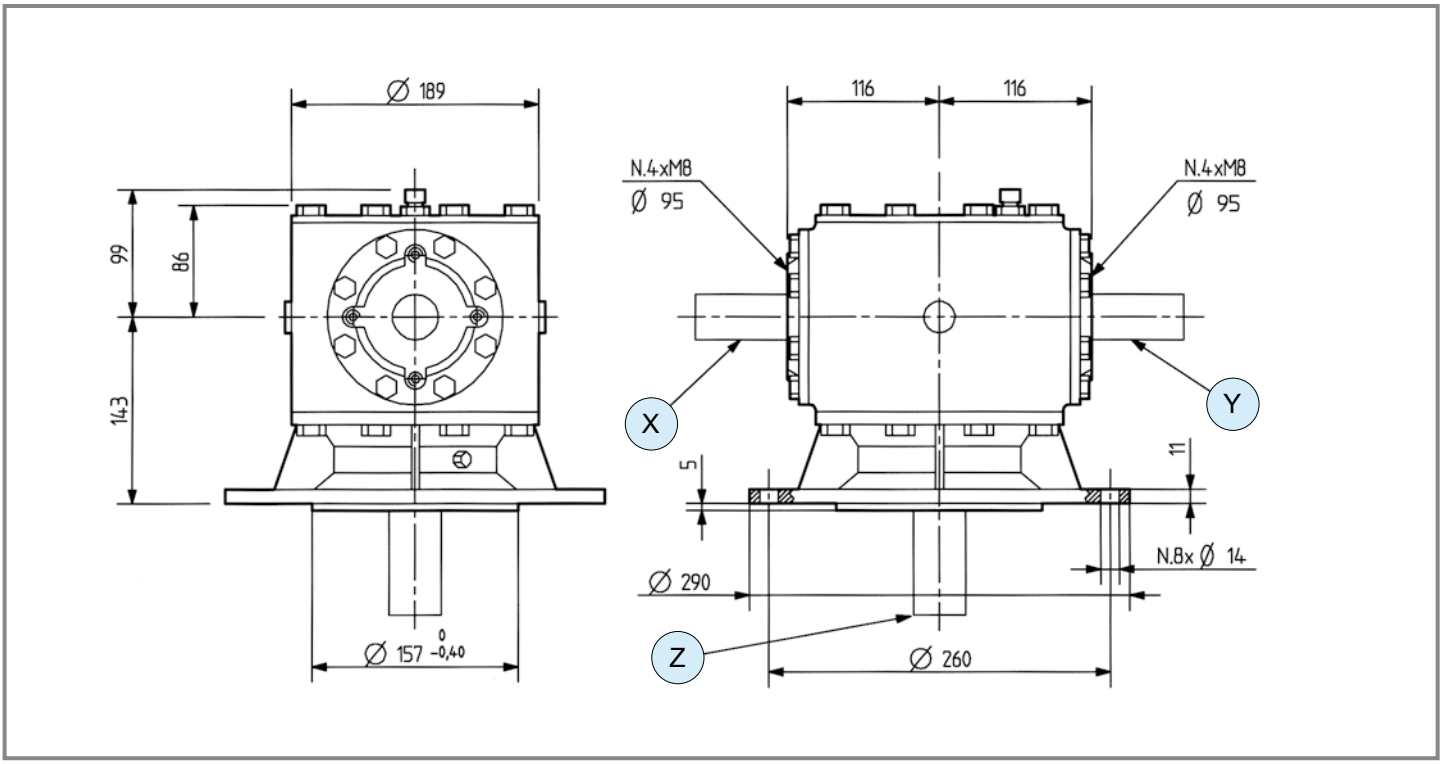

	i	N_1 [rpm]	P_1 [kW]	M_2 [Nm]	Shaft type X	Shaft type Y	Shaft type Z	Input	Lenght	Code	Mounting	
R	**1.92**	540	29.5	965	1 1" 3/8 Z6	1 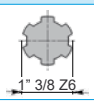 1" 3/8 Z6	34 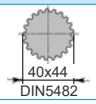 40x44 DIN5482	X	-	9.113.210	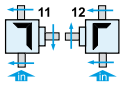	special

TV-274A

Code **274**

(2.03)

[kg] 51 | [l] 1.8

Per configurazioni non a catalogo contattare Servizio Tecnico-Commerciale
For non-catalog configurations contact Technical-Commercial Service

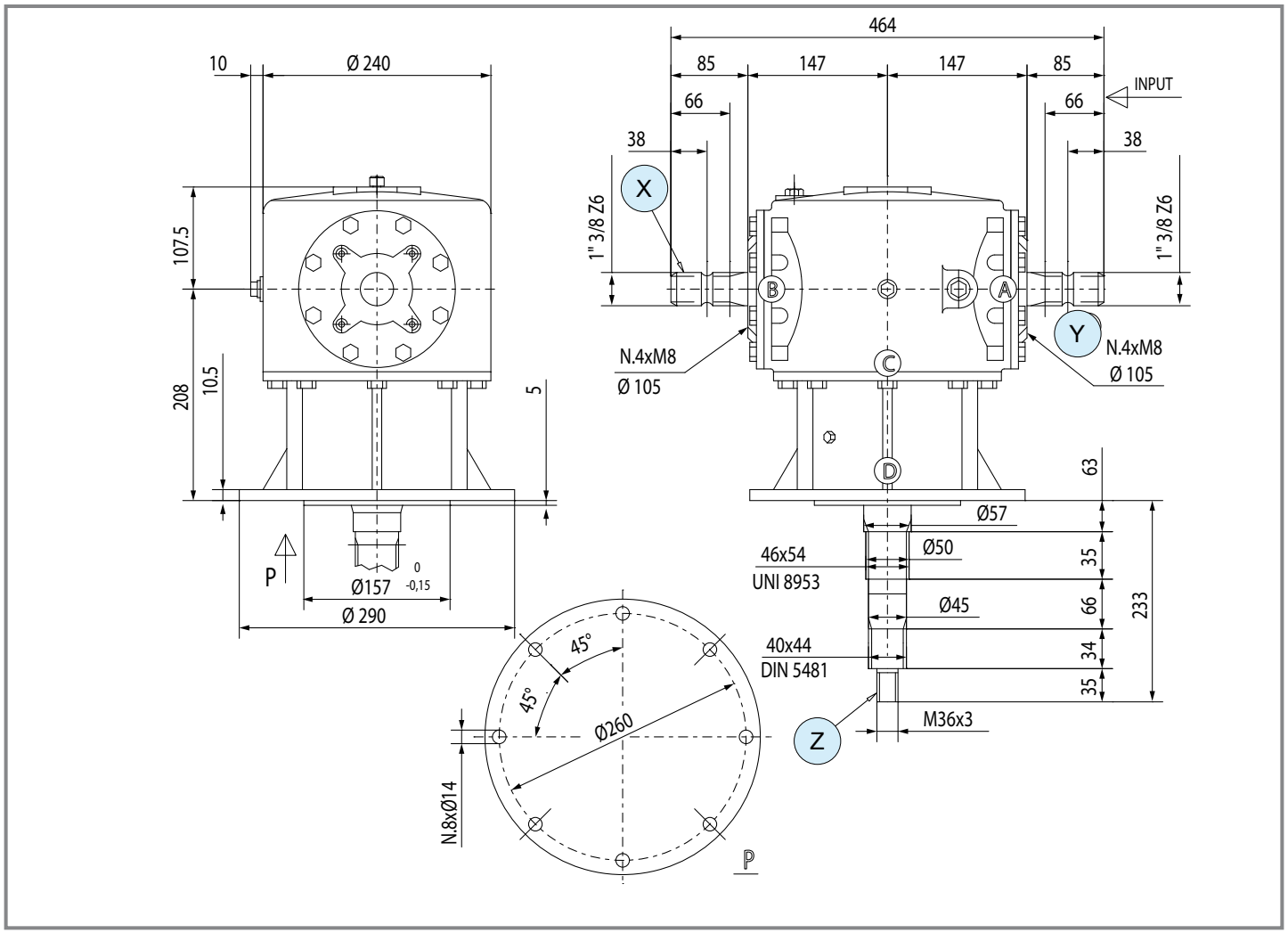

	i	N_1 [rpm]	P_1 [kW]	M_2 [Nm]	Shaft type X	Shaft type Y	Shaft type Z	Input	Leght	Code	Mounting	
R	**1.93**	540	58.9	1947	1 1" 3/8 Z6	1 1" 3/8 Z6	34 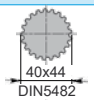 40x44 DIN5482 33 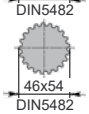 46x54 DIN5482	X	-	9.274.204	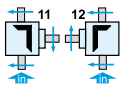	special

comer industries

TV-301H

Code **301**

(2.03)

[kg] 62 | [l] -

Per configurazioni non a catalogo contattare Servizio Tecnico-Commerciale
For non-catalog configurations contact Technical-Commercial Service

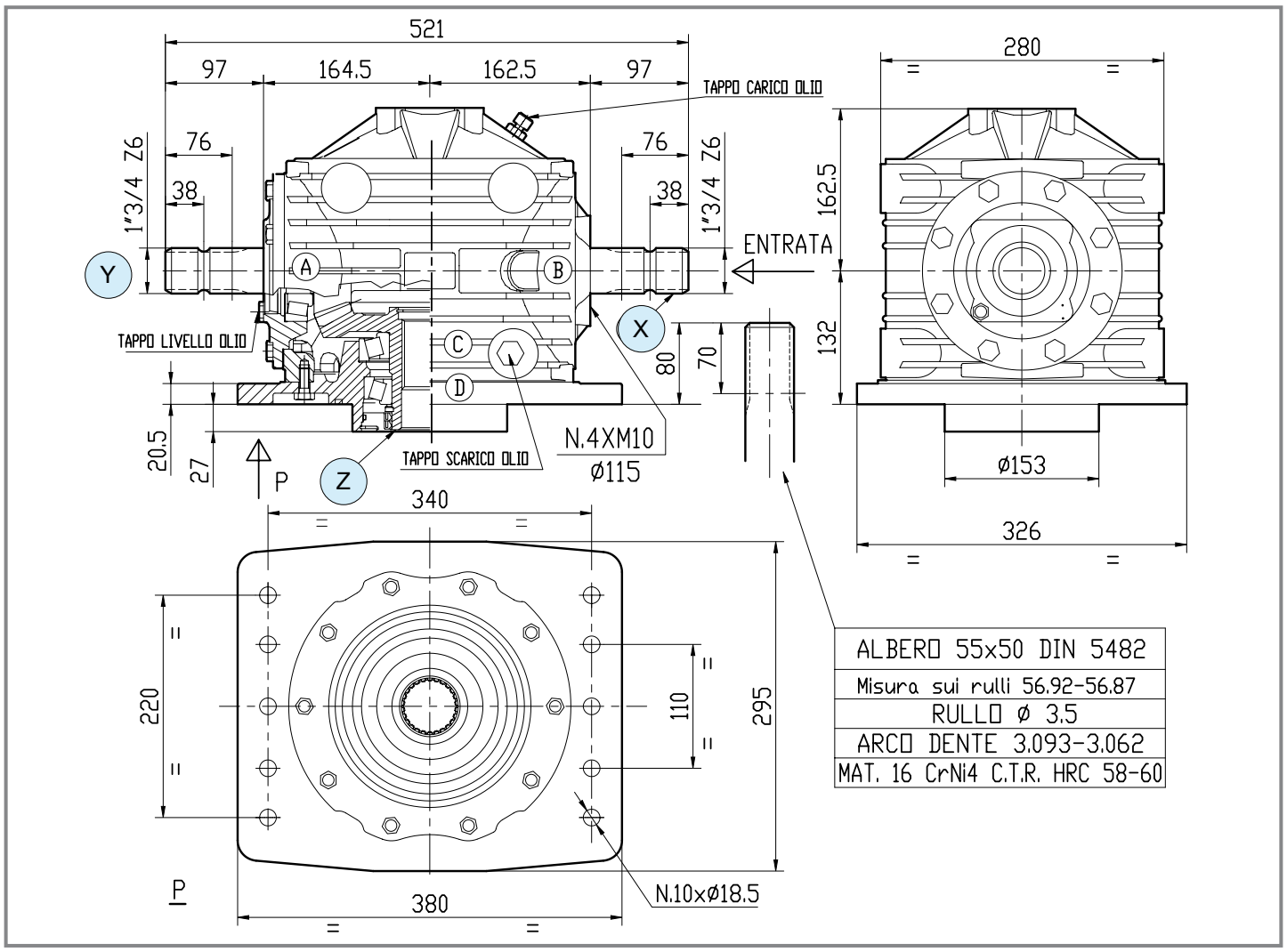

	i	N_1 [rpm]	P_1 [kW]	M_2 [Nm]	Shaft type X	Shaft type Y	Shaft type Z	Input	Lenght	Code	Mounting	
R	**2.42**	1000	73.5	1947	5 1" 3/4 Z6	5 1" 3/4 Z6	41 50x55 DIN5482	X	-	9.301.700	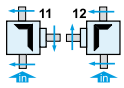	special

DV-813F

Code **813**

(2.03)

[kg] 77 | [l] -

Per configurazioni non a catalogo contattare Servizio Tecnico-Commerciale
For non-catalog configurations contact Technical-Commercial Service

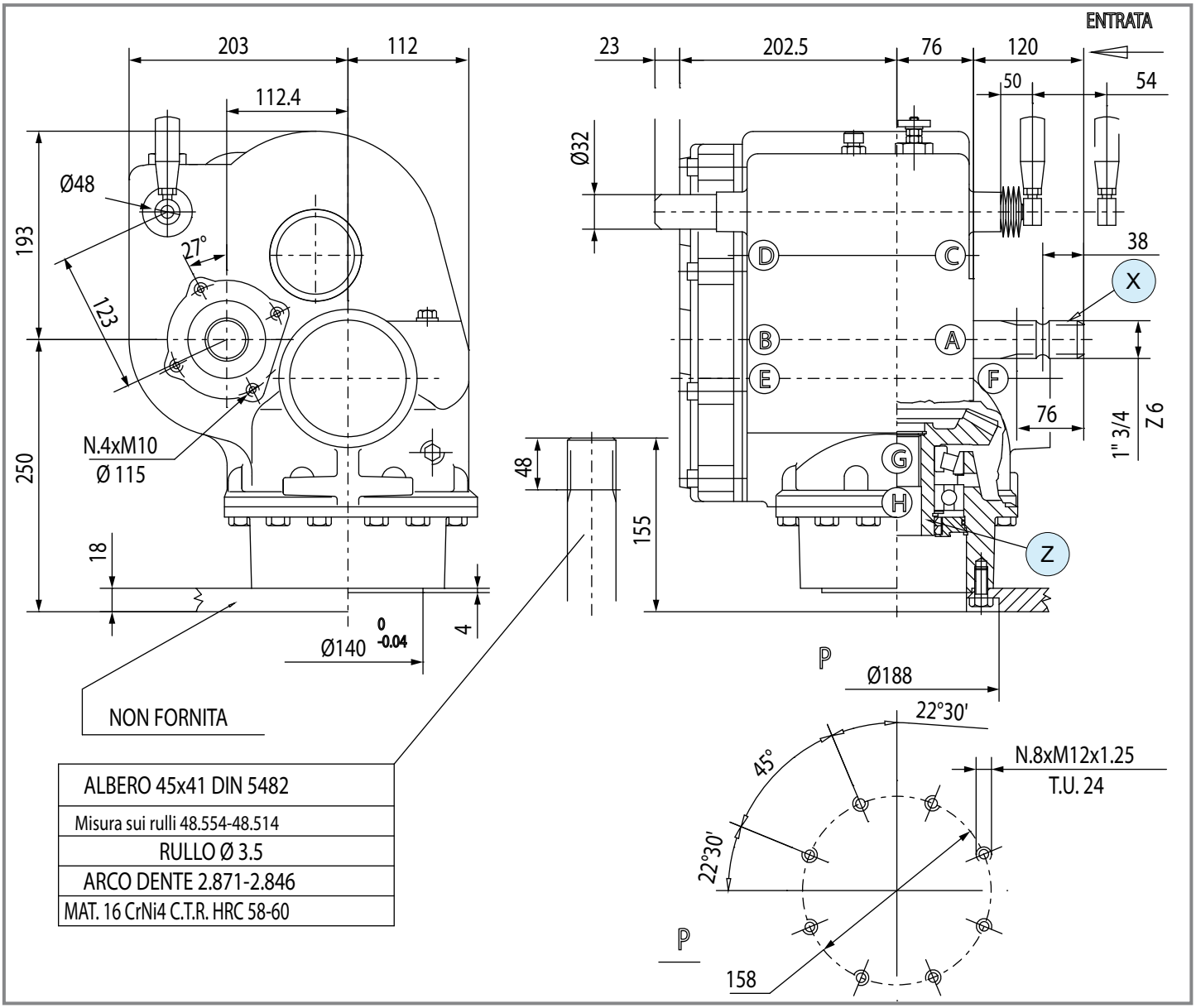

	i	N_1 [rpm]	P_1 [kW]	M_2 [Nm]	Shaft type X	Shaft type Y	Shaft type Z	Input	Lenght	Code	Mounting	
R	**2.21** **2.76**	540	51.5	-	5 1" 3/4 Z6	-	40 41x45 DIN5482	X	-	-	38 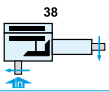	special

comer industries

MV-814F

Code **814**

(2.03)

[kg] 64 | [l] -

Per configurazioni non a catalogo contattare Servizio Tecnico-Commerciale
For non-catalog configurations contact Technical-Commercial Service

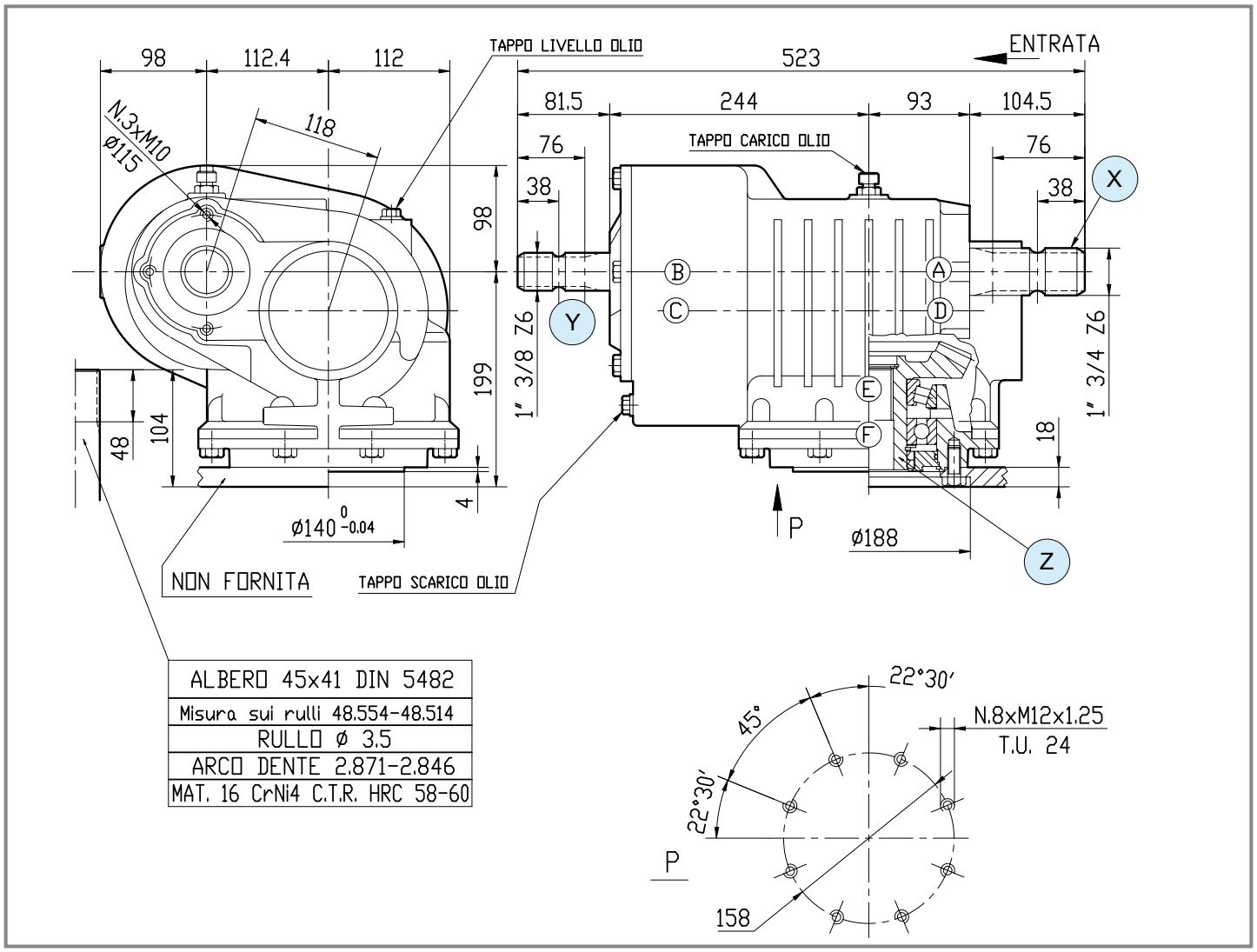

	i	N_1 [rpm]	P_1 [kW]	M_2 [Nm]	Shaft type X	Shaft type Y	Shaft type Z	Input	Lenght	Code	Mounting	
R	1.73 2.47	540	51.5	-	5 1" 3/4 Z6	1 1" 3/8 Z6	40 41x45 DIN5482	X	237	9.814.015	226	special
	1.73 2.47	540	51.5	-	5 1" 3/4 Z6	1 1" 3/8 Z6	40 41x45 DIN5482	X	237	9.814.016	225	special
	1.62 2.65	540	51.5	-	5 1" 3/4 Z6	1 1" 3/8 Z6	40 41x45 DIN5482	X	250	9.814.003	226	special
	1.62 2.65	540	51.5	-	5 1" 3/4 Z6	1 1" 3/8 Z6	40 41x45 DIN5482	X	200	9.814.008	226	special
	1.86 2.30	540	51.5	-	5 1" 3/4 Z6	1 1" 3/8 Z6	40 41x45 DIN5482	X	250	9.814.020	226	special
	1.86 2.30	540	51.5	-	5 1" 3/4 Z6	1 1" 3/8 Z6	40 41x45 DIN5482	X	250	9.814.021	226	special

MV-817F

Code **817**

(2.03)

[kg] 100 | [l] -

Per configurazioni non a catalogo contattare Servizio Tecnico-Commerciale
For non-catalog configurations contact Technical-Commercial Service

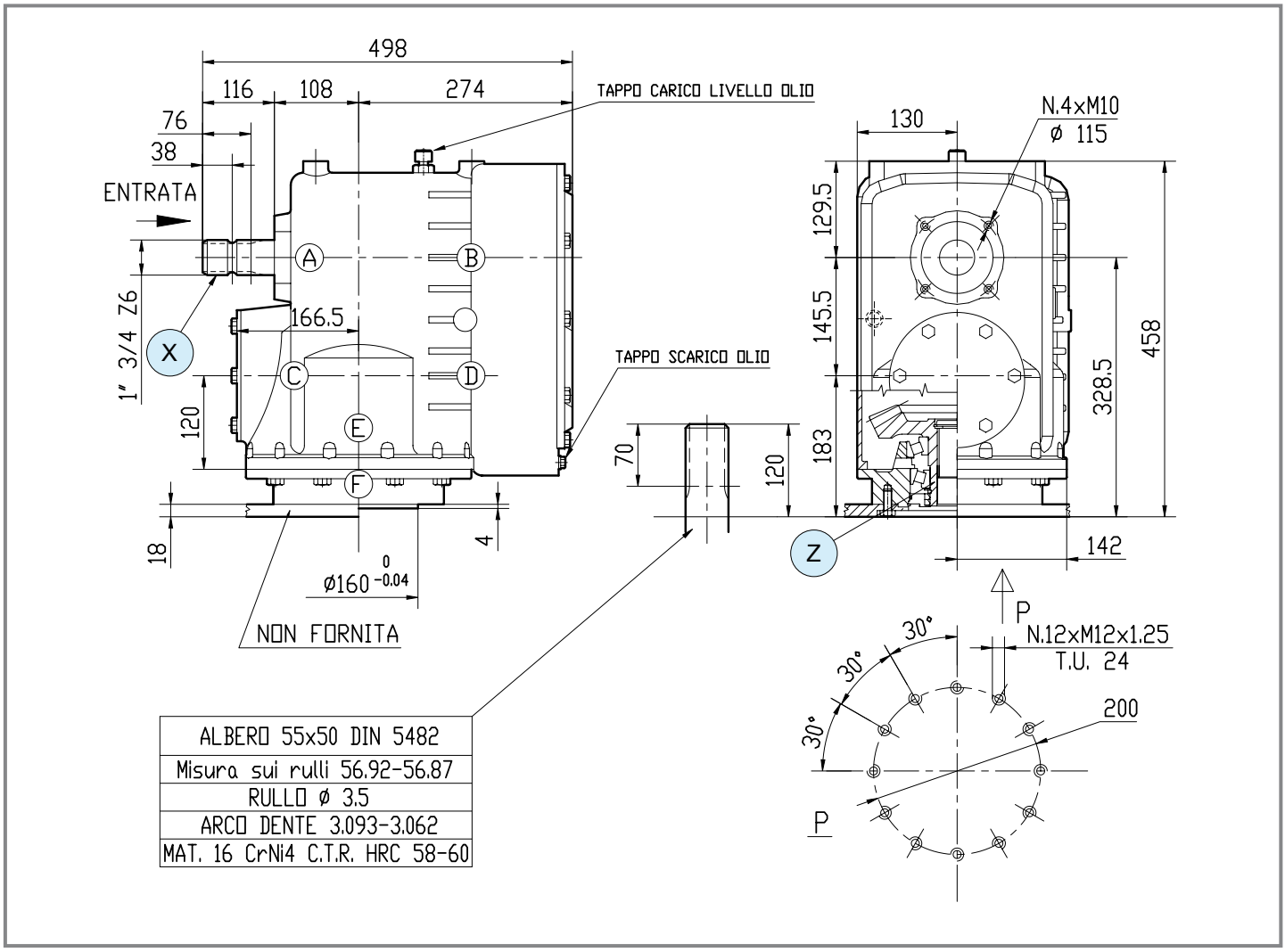

	i	N_1 [rpm]	P_1 [kW]	M_2 [Nm]	Shaft type X	Shaft type Y	Shaft type Z	Input	Lenght	Code	Mounting	
R	**1.55** **2.75**	1000	70.0	-	5 1" 3/4 Z6	-	41 50x55 DIN5482	X	-	9.817.800	20	special
R	**1.55** **2.75**	1000	70.0	-	5 1" 3/4 Z6	-	41 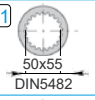 50x55 DIN5482	X	-	9.817.801	19	special
	1.15 **3.73**	1000	70.0	-	5 1" 3/4 Z6	-	41 50x55 DIN5482	X	-	-	-	special

comer industries

DV-818F

Code **818**

(2.03)

[kg] 112 | [l] -

Per configurazioni non a catalogo contattare Servizio Tecnico-Commerciale
For non-catalog configurations contact Technical-Commercial Service

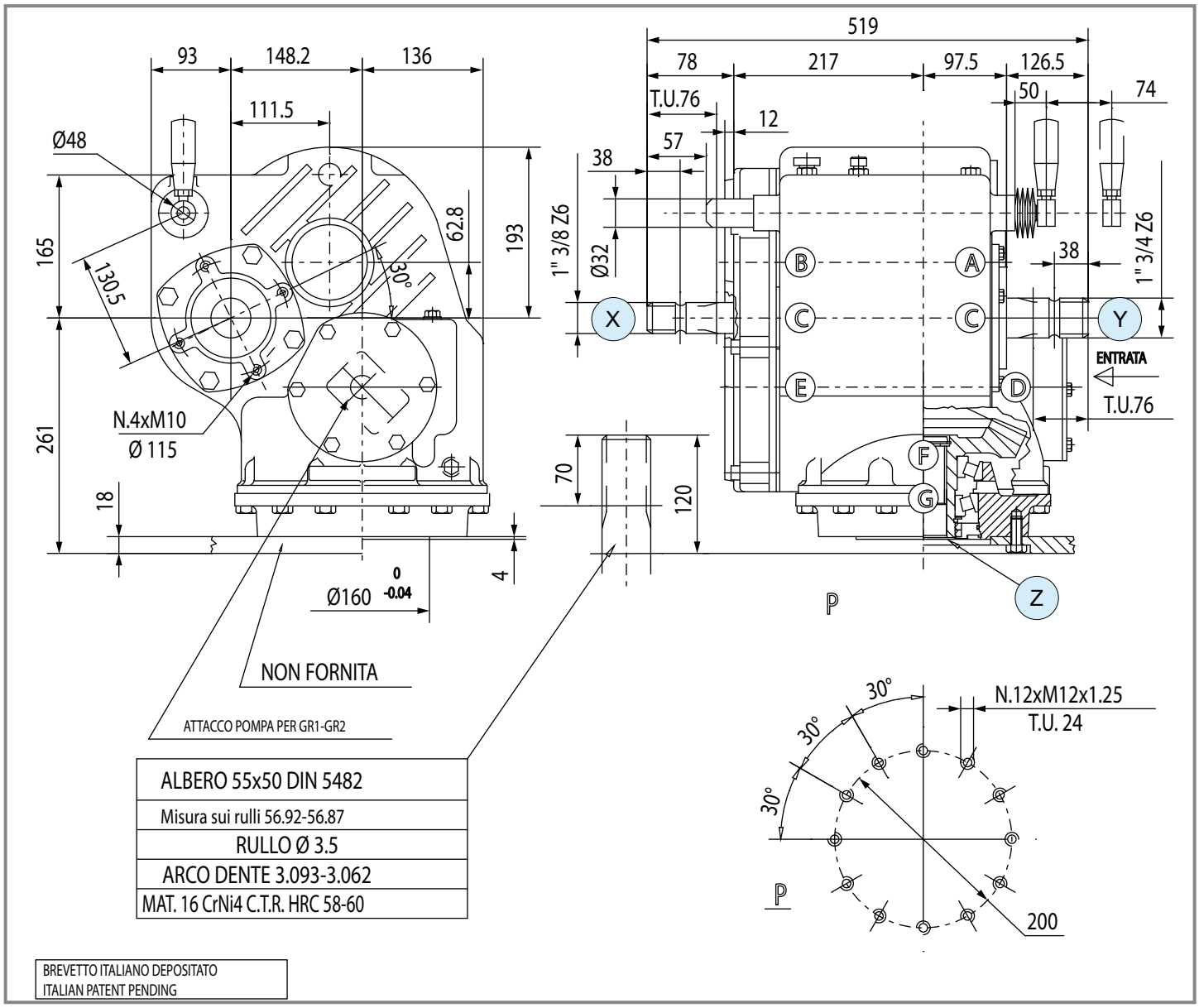

	i	N_1 [rpm]	P_1 [kW]	M_2 [Nm]	Shaft type X	Shaft type Y	Shaft type Z	Input	Lenght	Code	Mounting	
R	2.30 2.65 3.08	1000	70.0	-	1 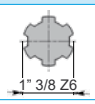 1" 3/8 Z6	5 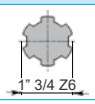 1" 3/4 Z6	41 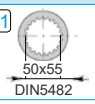 50x55 DIN5482	Y	-	-	-	special

MV-819F

Code **819**

(2.03)

[kg] 94 | [l] -

Per configurazioni non a catalogo contattare Servizio Tecnico-Commerciale
For non-catalog configurations contact Technical-Commercial Service

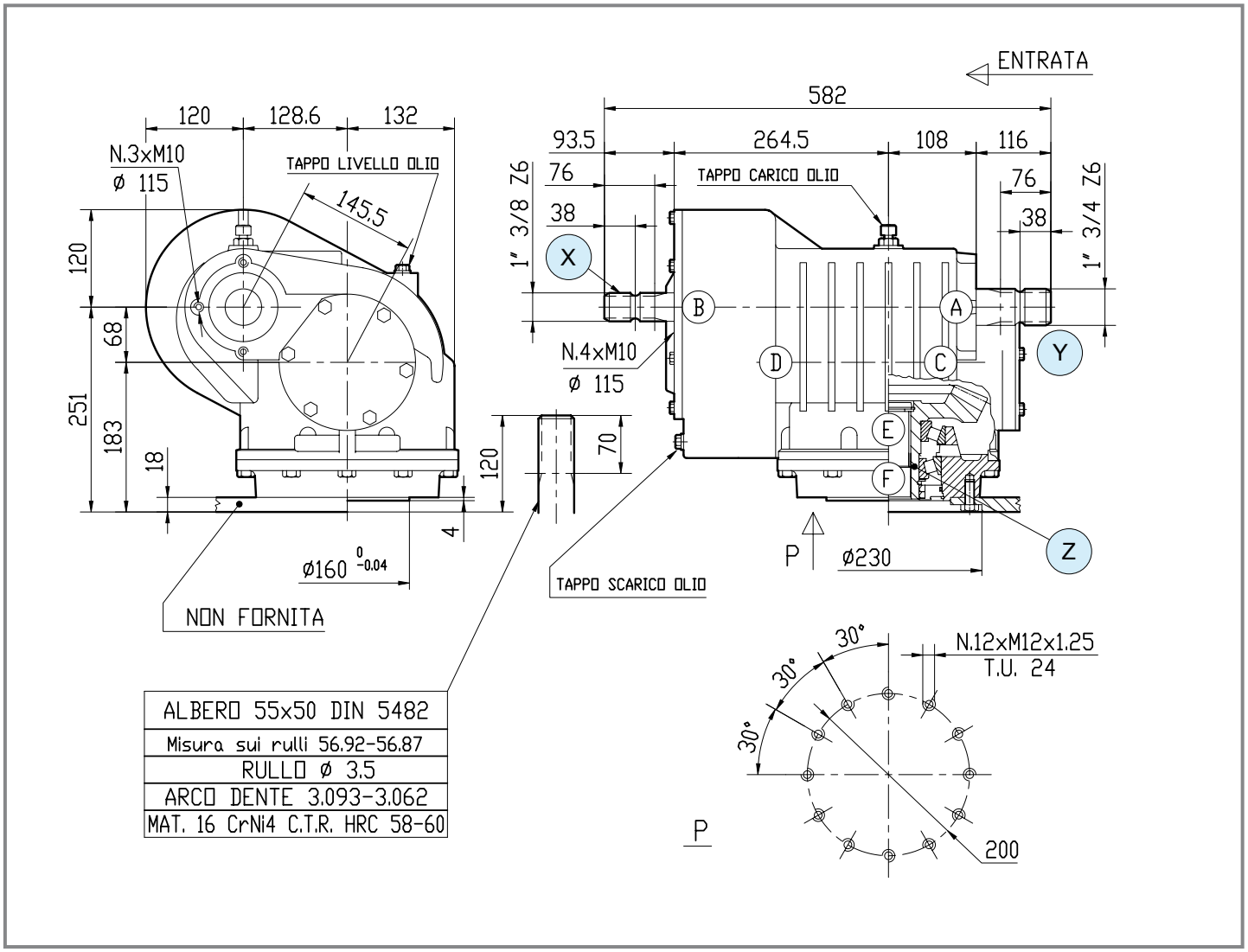

	i	N_1 [rpm]	P_1 [kW]	M_2 [Nm]	Shaft type X	Shaft type Y	Shaft type Z	Input	Leght	Code	Mounting	
R	**1.55** **2.76**	1000	70.0	-	1 1" 3/8 Z6	5 1" 3/4 Z6	41 50x55 DIN5482	Y	-	9.819.004	226	special
R	**1.55** **2.76**	1000	70.0	-	1 1" 3/8 Z6	5 1" 3/4 Z6	41 50x55 DIN5482	Y	-	9.819.005	225	special
	1.34 **3.20**	1000	70.0	-	1 1" 3/8 Z6	5 1" 3/4 Z6	41 50x55 DIN5482	Y	-	9.819.003	226	special

DV-823F

Code **823**

(2.03)

[kg]	140	[l]	-

Per configurazioni non a catalogo contattare Servizio Tecnico-Commerciale
For non-catalog configurations contact Technical-Commercial Service

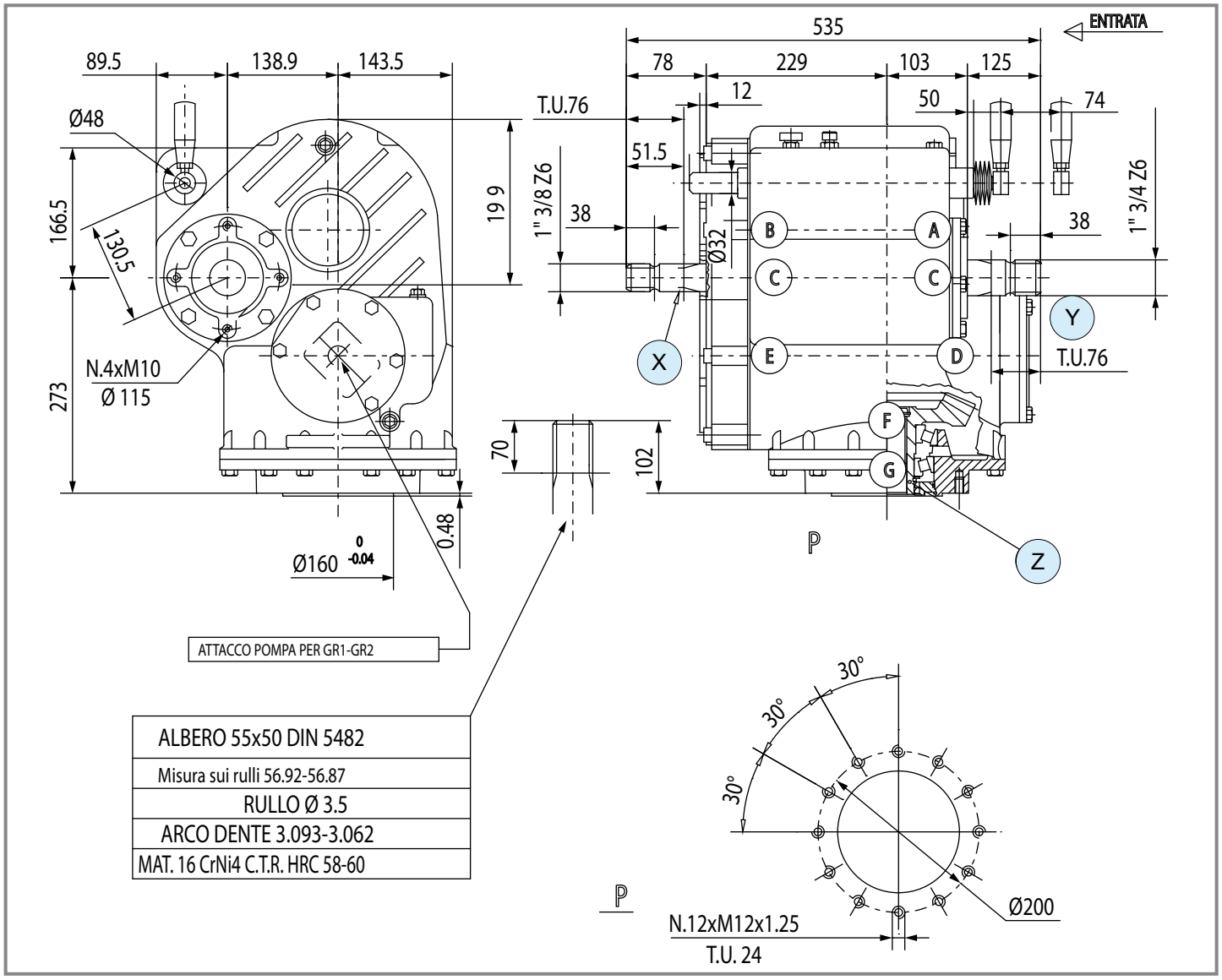

	i	N_1 [rpm]	P_1 [kW]	M_2 [Nm]	Shaft type X	Shaft type Y	Shaft type Z	Input	Lenght	Code	Mounting	
R	3.68 3.00 2.44	1000	96.0	-	1 1" 3/8 Z6	5 1" 3/4 Z6	41 50x55 DIN5482	Y	-	-	-	special
	4.20 3.40 2.80	1000	96.0	-	1 1" 3/8 Z6	5 1" 3/4 Z6	41 50x55 DIN5482	Y	-	-	-	special

MV-824F

Code **824**

(2.03)

[kg] 110 | [l] -

Per configurazioni non a catalogo contattare Servizio Tecnico-Commerciale
For non-catalog configurations contact Technical-Commercial Service

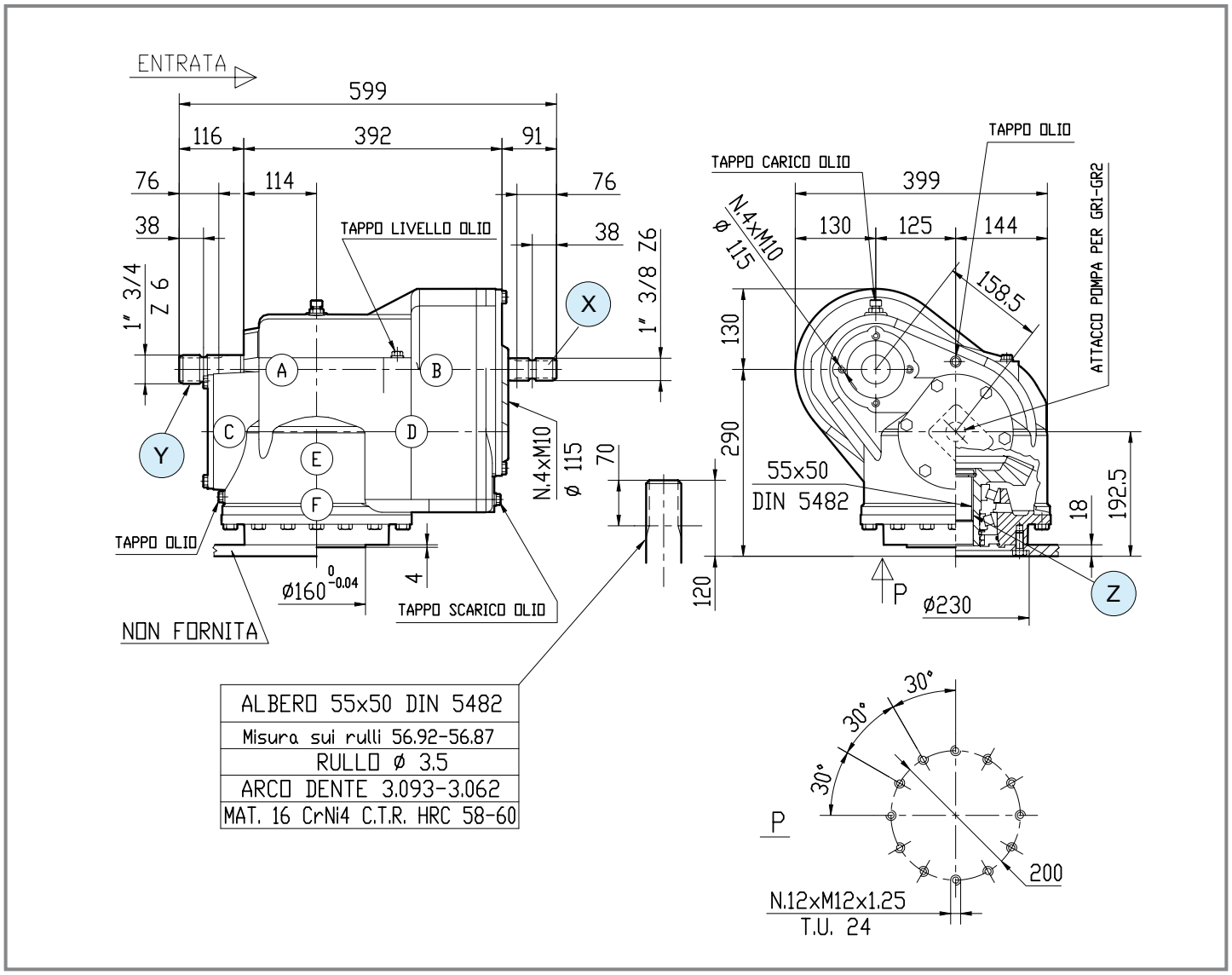

	i	N_1 [rpm]	P_1 [kW]	M_2 [Nm]	Shaft type X	Shaft type Y	Shaft type Z	Input	Lenght	Code	Mounting	
R	**1.54 2.78**	1000	96.0	-	1 — 1" 3/8 Z6	5 — 1" 3/4 Z6	41 — 50x55 DIN5482	X	-	9.824.004	226	special
	1.54 2.78	1000	96.0	-	1 — 1" 3/8 Z6	5 — 1" 3/4 Z6	41 — 50x55 DIN5482	X	-	9.824.007	225	special
	1.34 3.20	1000	96.0	-	1 — 1" 3/8 Z6	5 — 1" 3/4 Z6	41 — 50x55 DIN5482	X	-	-	226	special
	1.34 3.20	1000	96.0	-	1 — 1" 3/8 Z6	5 — 1" 3/4 Z6	41 — 50x55 DIN5482	X	-	-	225	special

DV-733F

Code **733**

(2.03)

[kg] 143 | [l] -

Per configurazioni non a catalogo contattare Servizio Tecnico-Commerciale
For non-catalog configurations contact Technical-Commercial Service

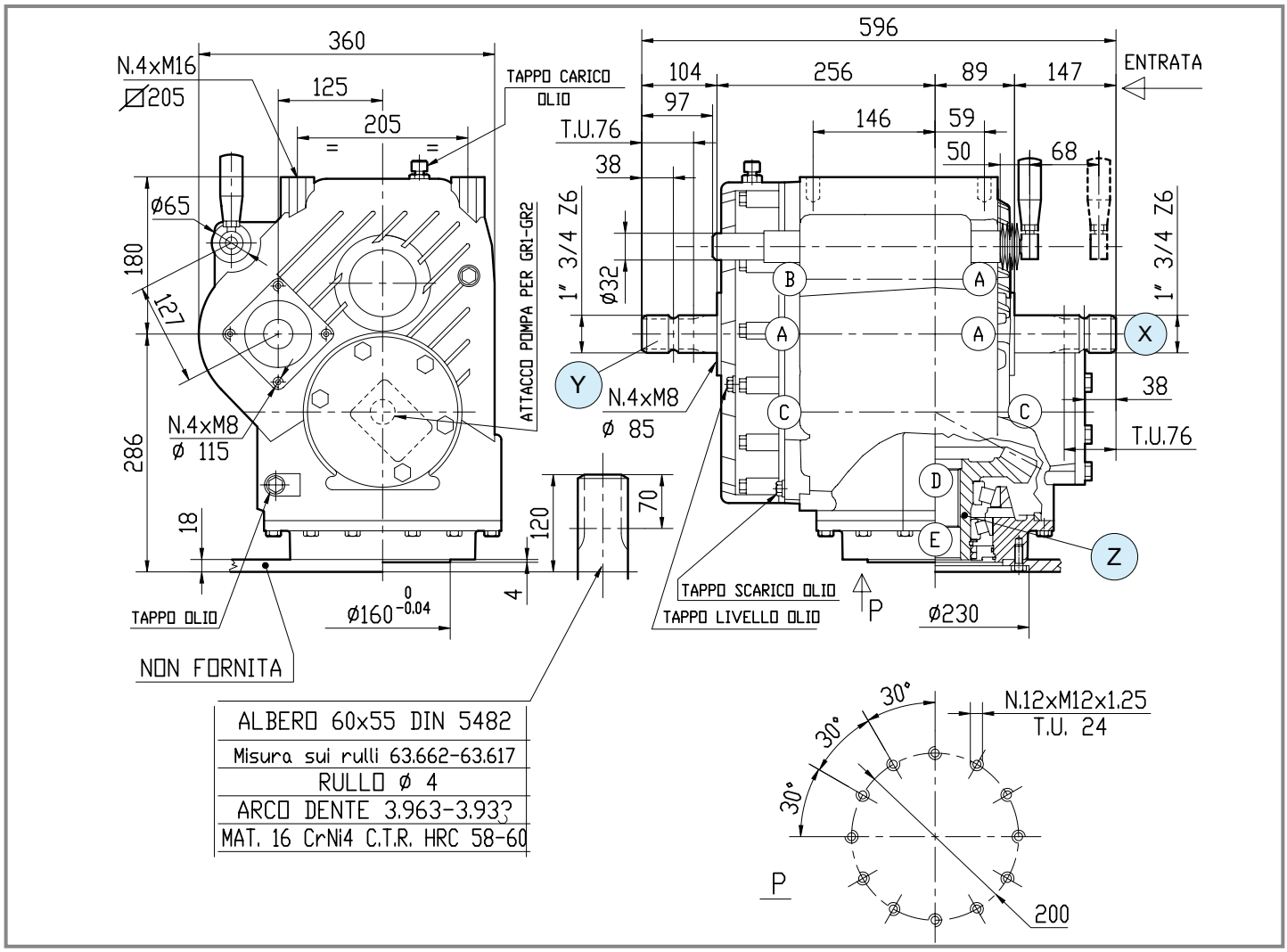

	i	N_1 [rpm]	P_1 [kW]	M_2 [Nm]	Shaft type X	Shaft type Y	Shaft type Z	Input	Lenght	Code	Mounting	
R	**2.56** **2.98**	1000	132.0	-	5 1" 3/4 Z6	5 1" 3/4 Z6	42 55x60 DIN5482	X	-	9.733.004	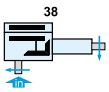 38	special

MV-826F

Code **826**

(2.03)

[kg] 122 | [l] -

Per configurazioni non a catalogo contattare Servizio Tecnico-Commerciale
For non-catalog configurations contact Technical-Commercial Service

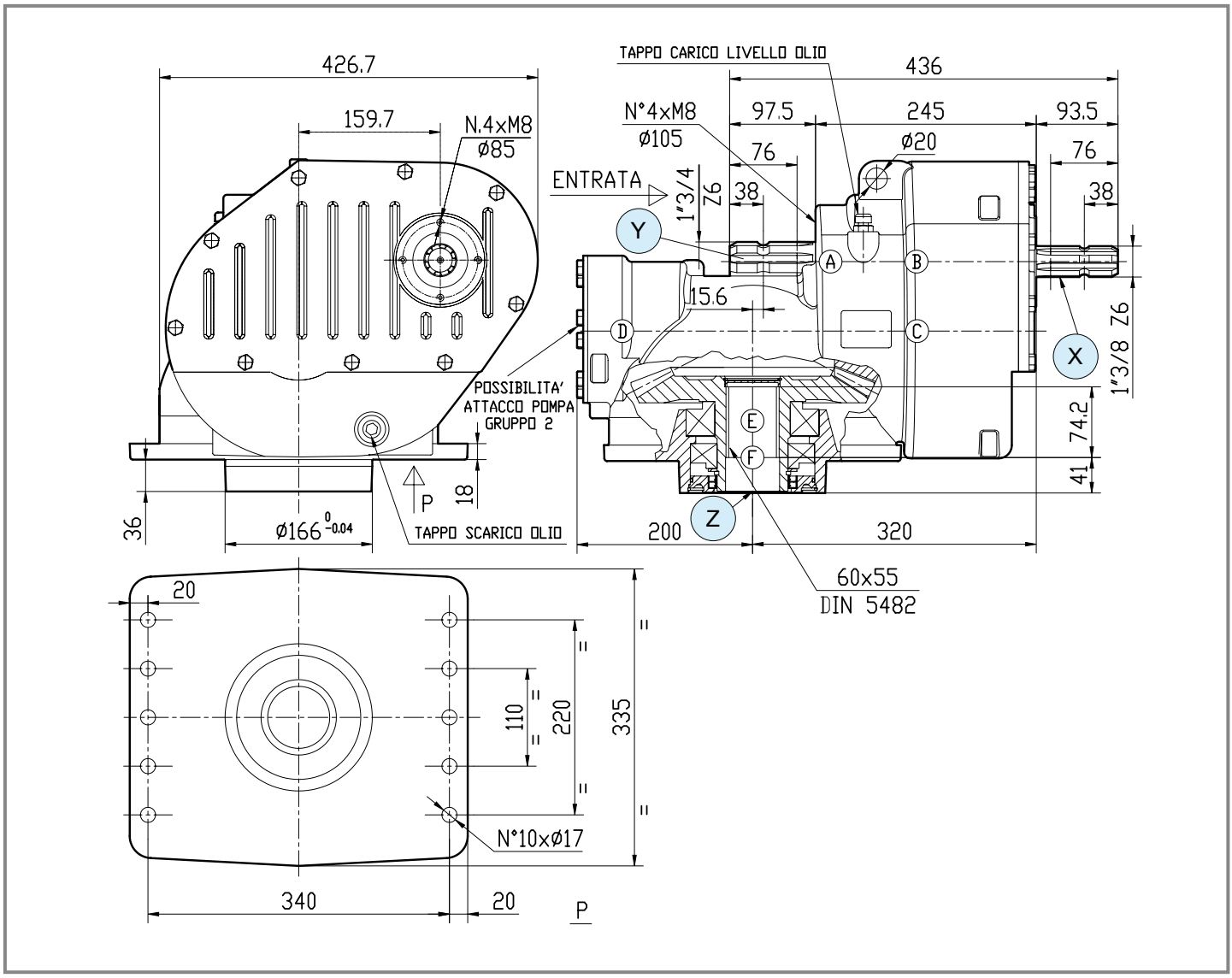

	i	N_1 [rpm]	P_1 [kW]	M_2 [Nm]	Shaft type X	Shaft type Y	Shaft type Z	Input	Lenght	Code	Mounting	
R	**1.62 2.74**	1000	147.0	-	1 1" 3/8 Z6	5 1" 3/4 Z6	42 55x60 DIN5482	Y	-	9.826.002	225	special
	1.62 2.74	1000	147.0	-	1 1" 3/8 Z6	5 1" 3/4 Z6	42 55x60 DIN5482	Y	-	9.826.003	226	special
	1.32 3.35	1000	147.0	-	1 1" 3/8 Z6	5 1" 3/4 Z6	42 55x60 DIN5482	Y	-	9.826.000	226	special
	1.32 3.35	1000	147.0	-	1 1" 3/8 Z6	5 1" 3/4 Z6	42 55x60 DIN5482	Y	-	9.826.004	225	special

D-825A

Code **825**

(2.03)

[kg]	166	[l]	-

Per configurazioni non a catalogo contattare Servizio Tecnico-Commerciale
For non-catalog configurations contact Technical-Commercial Service

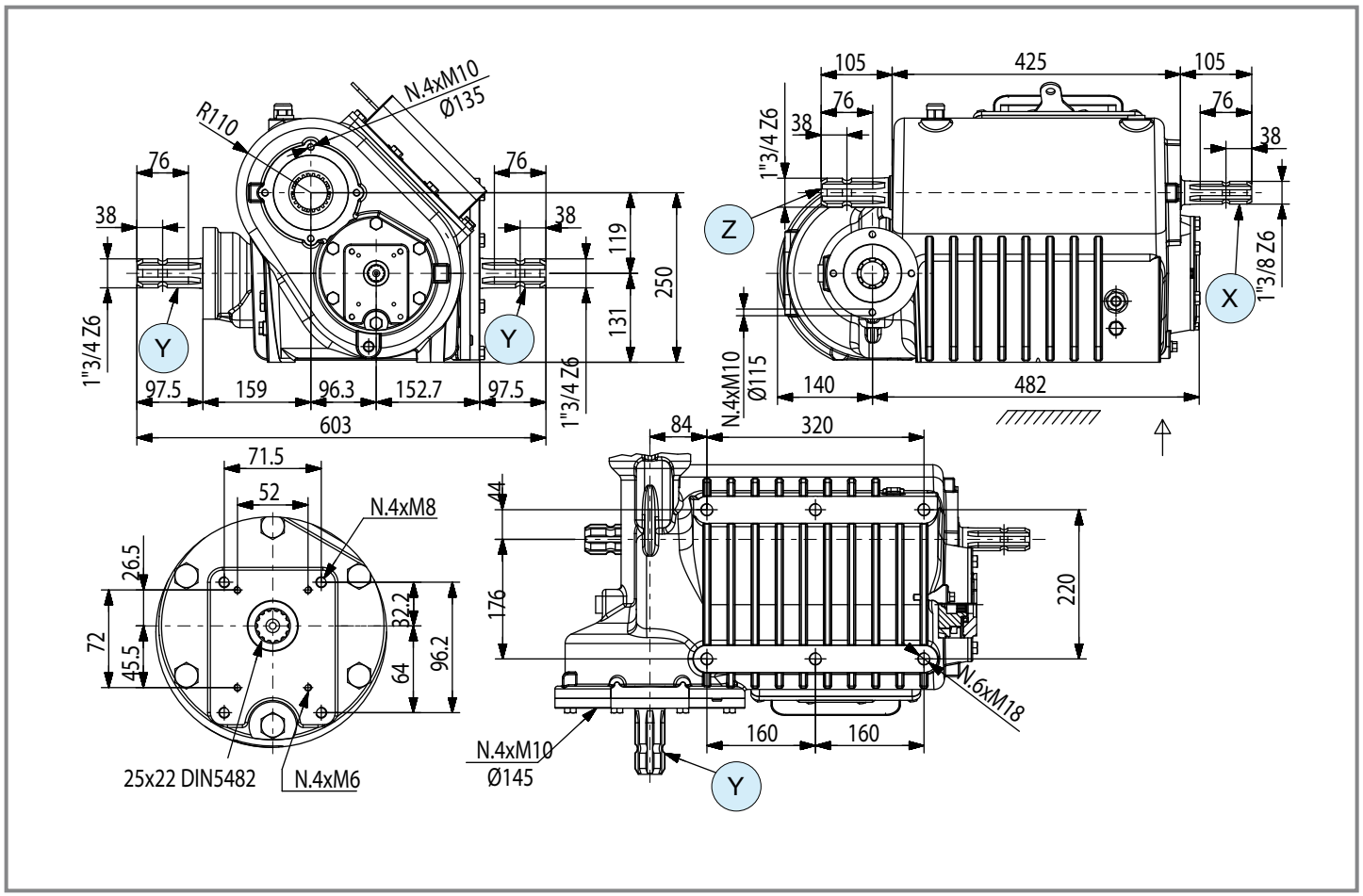

	i	N_1 [rpm]	P_1 [kW]	M_2 [Nm]	Shaft type X	Shaft type Y	Shaft type Z	Input	Features	Code	Mounting	
R	**1.07** **1.27**	1000	290.0	-	1 1" 3/8 Z6	5 1" 3/4 Z6	5 1" 3/4 Z6	Z	4 shafts	9.825.100	-	special
R	**1.07** **1.27** **1.68**	1000	220.0	-	1 1" 3/8 Z6	5 1" 3/4 Z6	5 1" 3/4 Z6	Z	4 shafts	9.825.003	-	special

Per configurazioni non a catalogo contattare Servizio Tecnico-Commerciale
For non-catalog configurations contact Technical-Commercial Service

	i	$M_{2\text{ - max}}$ [Nm]	Tipologia alberi disponibili *Available type of shafts*	p.
T-304C	R 3.00	947	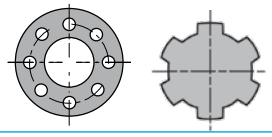	148
L-196J	R 3.18	1004	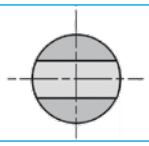	149
T-278A	R 2.91	1063	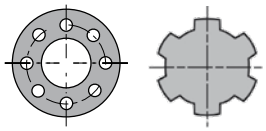	150
T-290F	R 3.00	1361	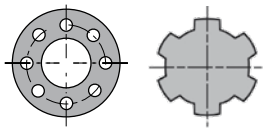	151
T-22F	R 3.00	1361	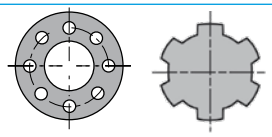	152

T-304C

Code **304**

(2.04)

[kg] 21 | [l] 1.1

Per configurazioni non a catalogo contattare Servizio Tecnico-Commerciale
For non-catalog configurations contact Technical-Commercial Service

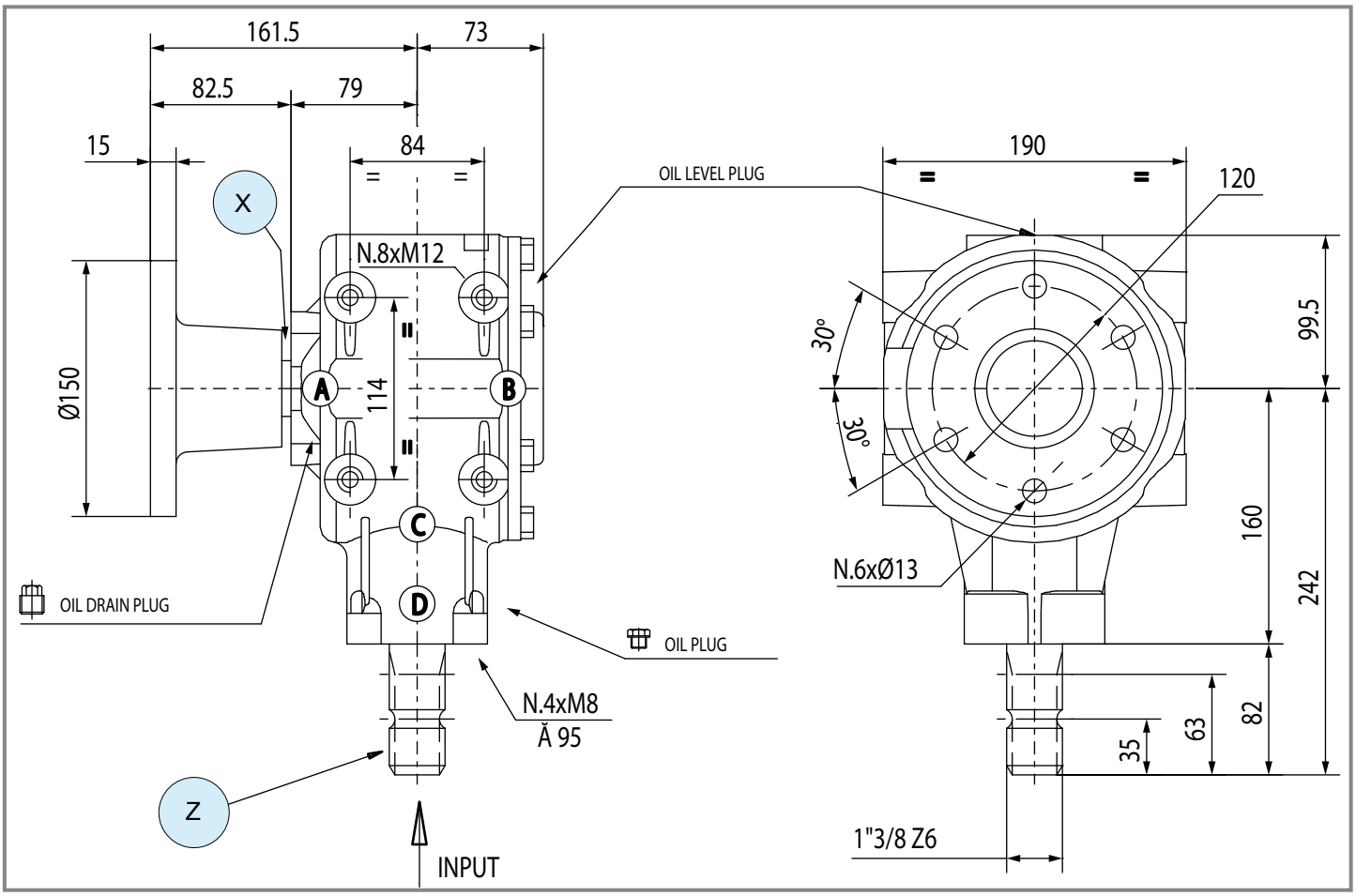

	i	N_1 [rpm]	P_1 [kW]	M_2 [Nm]	Shaft type X	Shaft type Y	Shaft type Z	Input	Code	Mounting	
R	**3.00**	540	18.4	947		-	1 1" 3/8 Z6	Z	9.304.027	3 4	special

comer industries

L-196J

Code **196.8**

(2.04)

[kg] 27.3 | [l] -

Per configurazioni non a catalogo contattare Servizio Tecnico-Commerciale
For non-catalog configurations contact Technical-Commercial Service

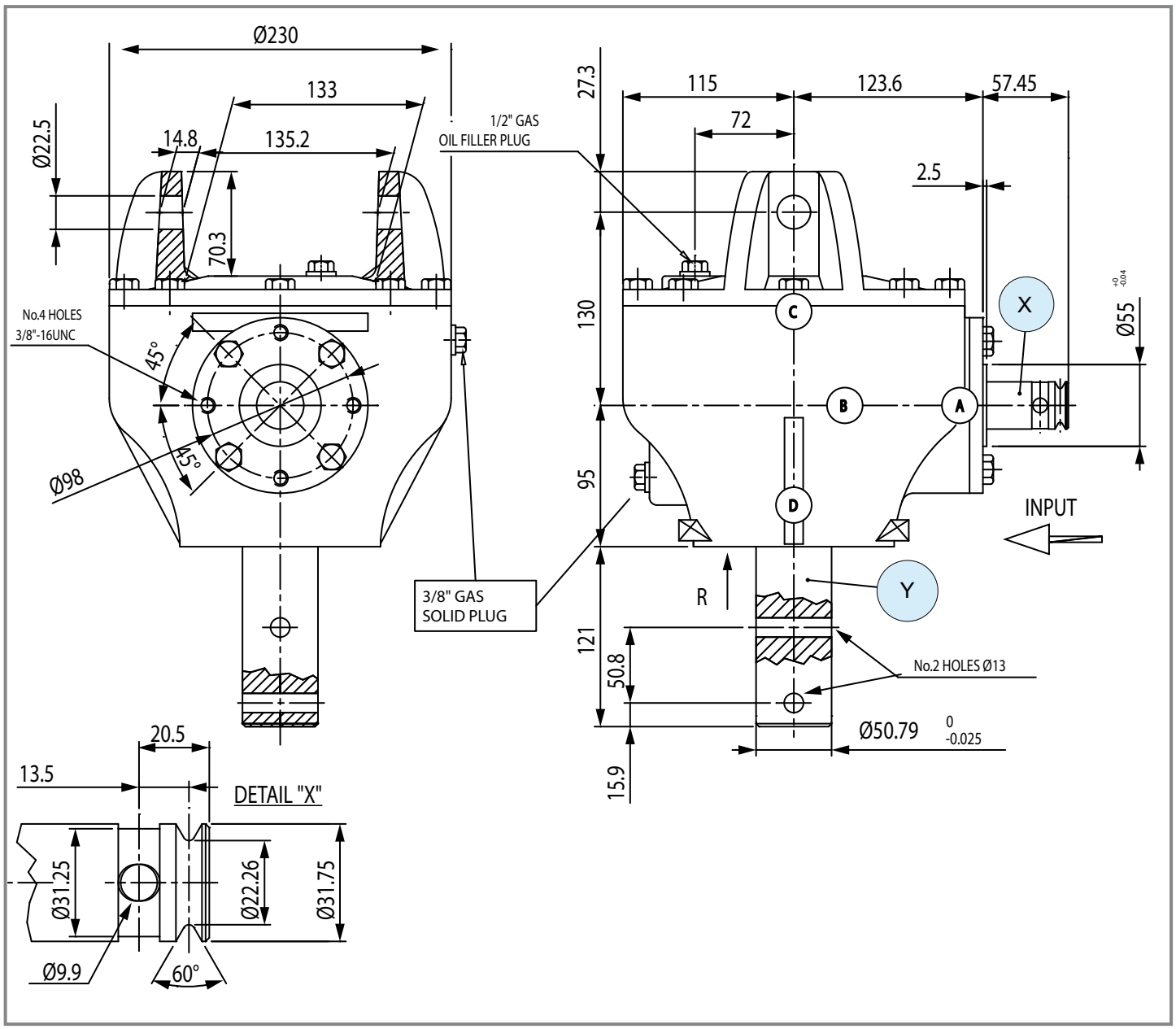

	i	N_1 [rpm]	P_1 [kW]	M_2 [Nm]	Shaft type X	Shaft type Y	Shaft type Z	Input	Code	Mounting	
R	**3.18**	540	18.4	1004	L 121 ø 31.74 n.2 ø13 orthogonals	L 121 ø 50.79 n.2 ø13 orthogonals	-	X	9.196.803	3 4	special

T-278A

Code **278**

Per configurazioni non a catalogo contattare Servizio Tecnico-Commerciale
For non-catalog configurations contact Technical-Commercial Service

[kg] [l]

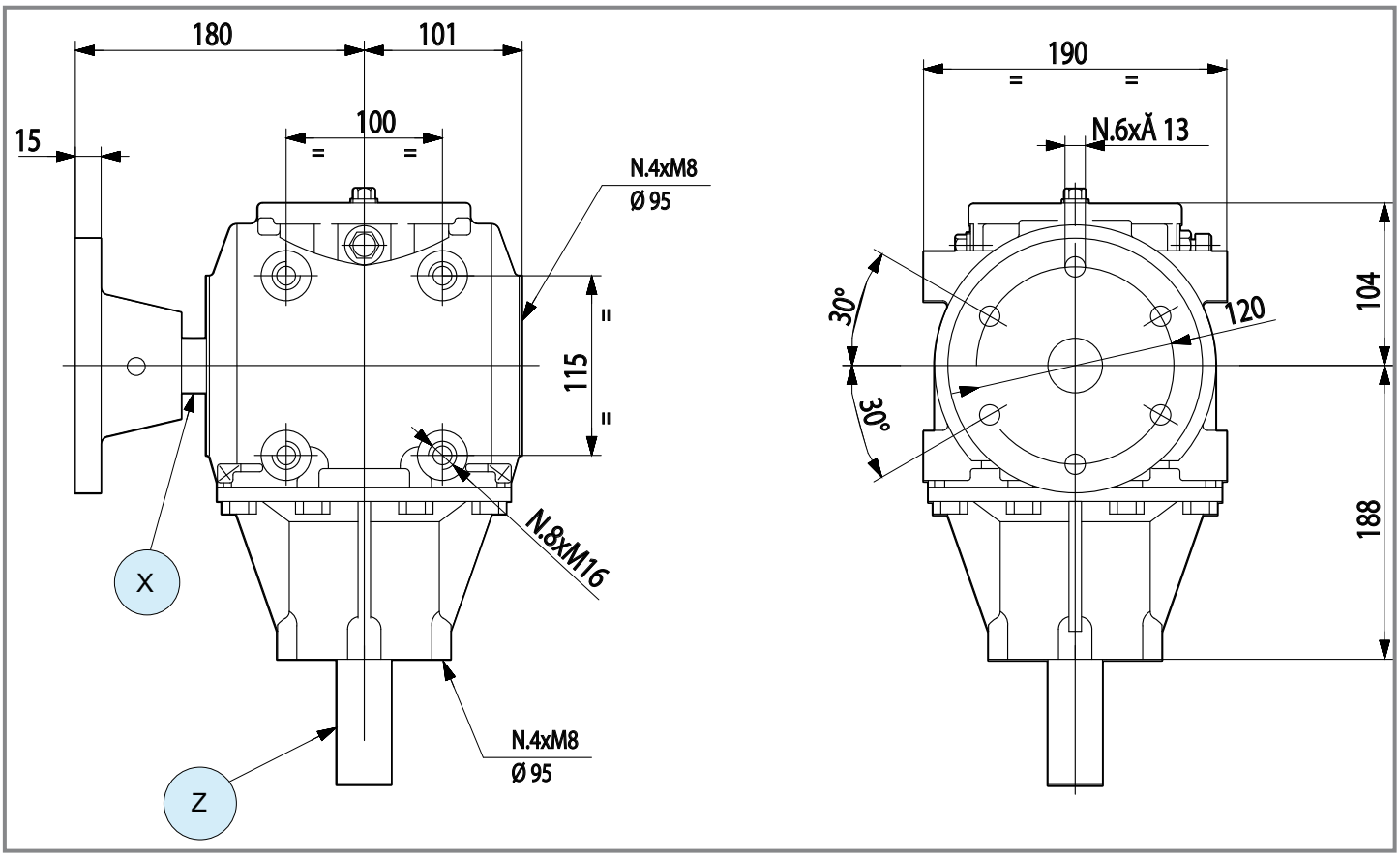

	i	N_1 [rpm]	P_1 [kW]	M_2 [Nm]	Shaft type X	Shaft type Y	Shaft type Z	Input	Code	Mounting	
R	**2.91**	540	21.3	1063		-	1 1" 3/8 Z6	Z	9.278.063	3 4	special

comer industries

T-290F

Code **290**

(2.04)

kg [kg]	39	OIL [l]	-

Per configurazioni non a catalogo contattare Servizio Tecnico-Commerciale
For non-catalog configurations contact Technical-Commercial Service

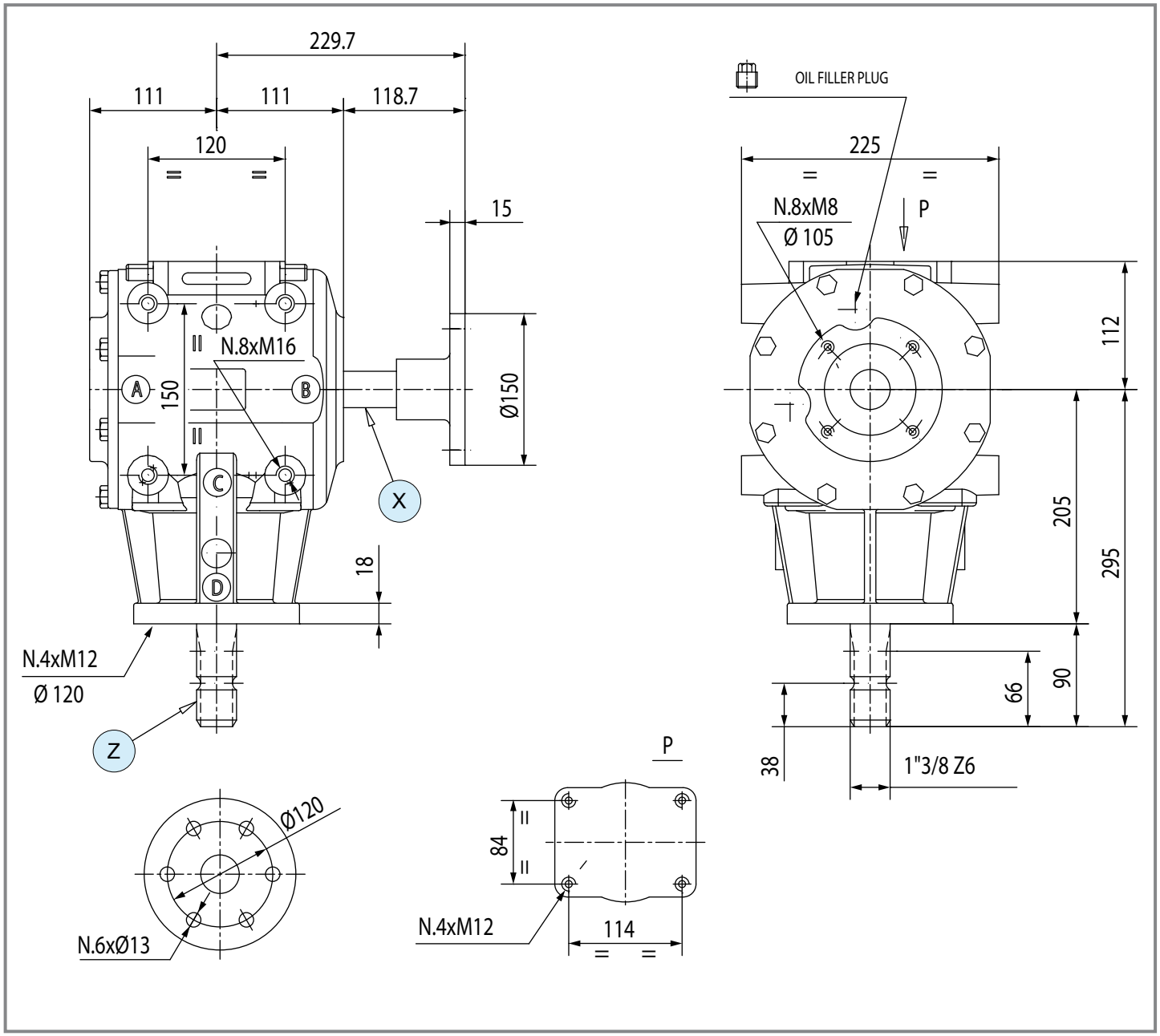

	i	N_1 [rpm]	P_1 [kW]	M_2 [Nm]	Shaft type X	Shaft type Y	Shaft type Z	Input	Code	Mounting	
R	**3.00**	540	26.5	1361		-	1 1" 3/8 Z6	Z	9.290.003	3 4	special

T-22F

Code **262**

(2.04)

[kg]	29	[l]	3.1

Per configurazioni non a catalogo contattare Servizio Tecnico-Commerciale
For non-catalog configurations contact Technical-Commercial Service

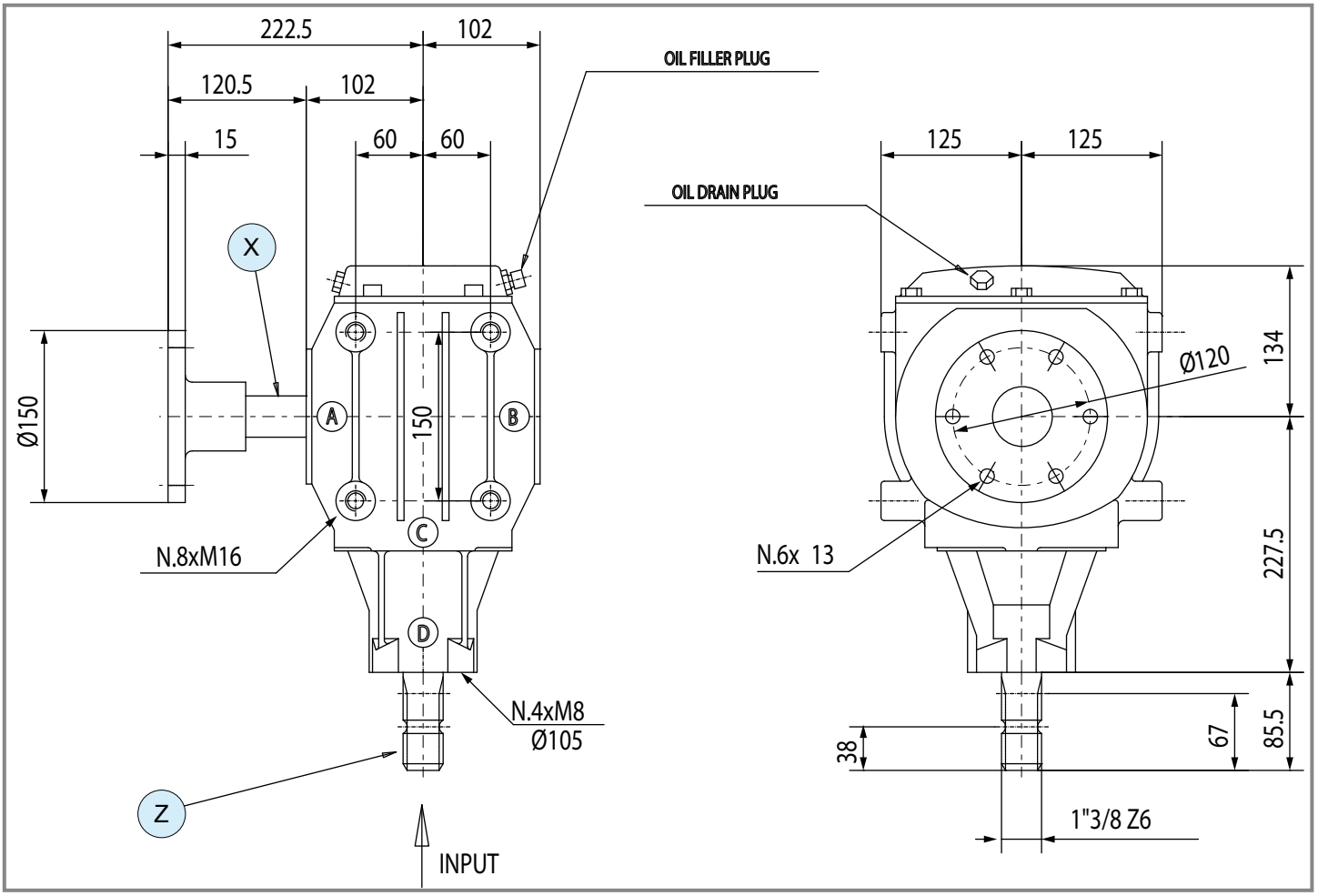

	i	N_1 [rpm]	P_1 [kW]	M_2 [Nm]	Shaft type X	Shaft type Y	Shaft type Z	Input	Code	Mounting	
R	**3.00**	540	39.0	2007		-	1 1" 3/8 Z6	Z	9.262.011	3 4	special

comer industries

Questa pagina è lasciata intenzionalmente bianca
This page is intentionally left blank

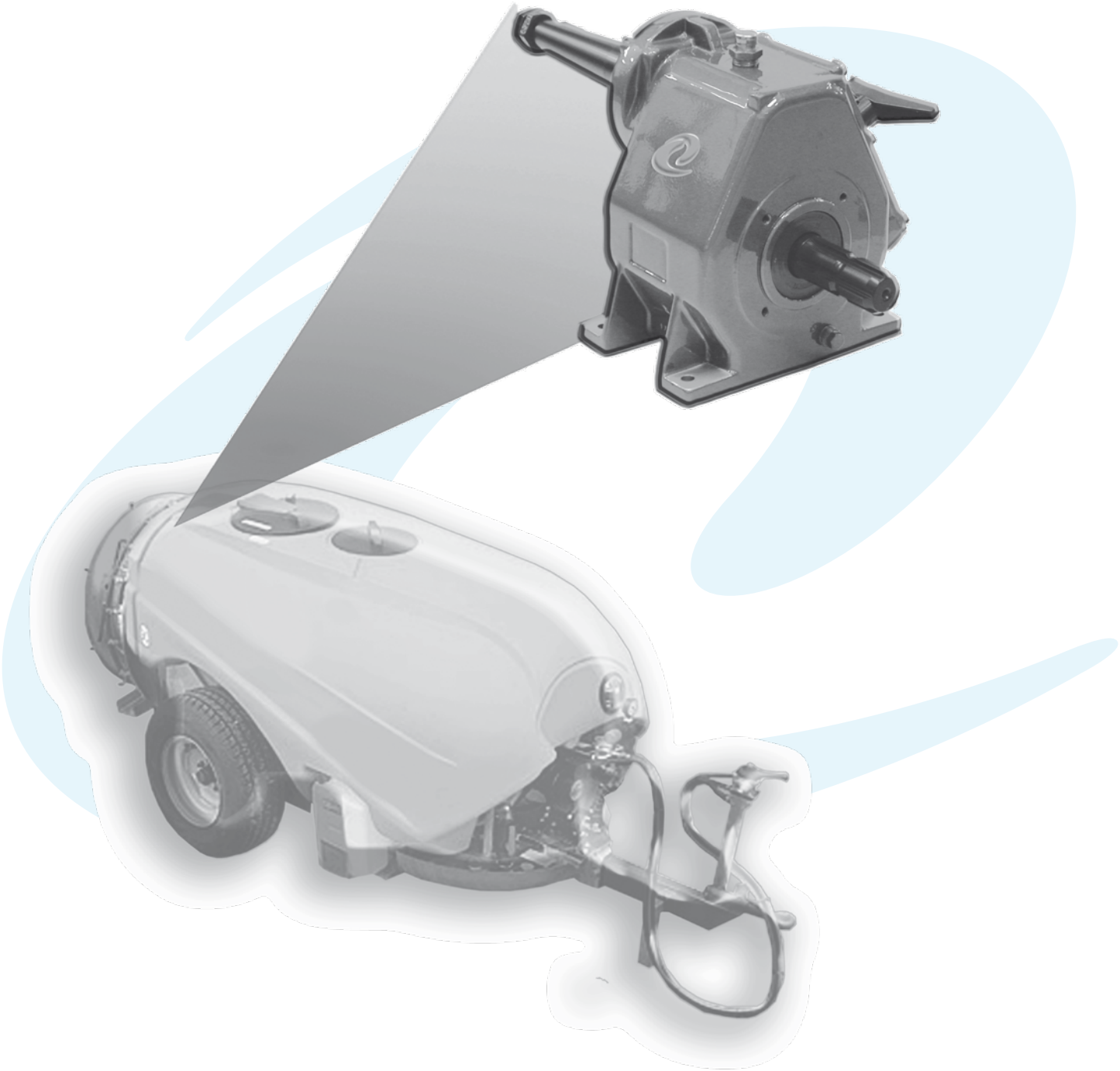

Per configurazioni non a catalogo contattare Servizio Tecnico-Commerciale
For non-catalog configurations contact Technical-Commercial Service

	i	$P_{1\text{ - max}}$ [kW]	$M_{2\text{ - max}}$ [Nm]	Tipologia alberi disponibili *Available type of shafts*	p.
D-7A	M + 4.00÷5.82 - = = - R + = -	21.7	93		156
D-7B	M + 4.00÷5.25 - = = - R + = -	21.7	95		157
D-27A	M + 4.00÷5.25 - = = - R + = -	22.1	-		158
D-27J **D-27B**	M + 3.69÷7.45 - = = - R + = -	22.1	-	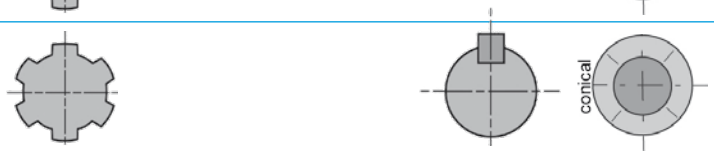	159
D-21A	M + 3.60÷7.45 - = = - R + = -	47.8	-		160
D-21B **D-21F**	M + 2.90÷4.90 - = = - R + = -	47.8	-		161
D-21A double output	M + 3.60÷4.93 - = = - R + = -	40.5	-	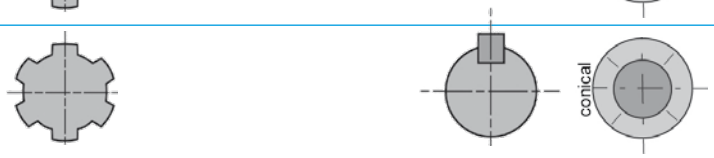	162

D-7A

Code **707**

(3.01)

[kg]	17	[l]	0.9

Per configurazioni non a catalogo contattare Servizio Tecnico-Commerciale
For non-catalog configurations contact Technical-Commercial Service

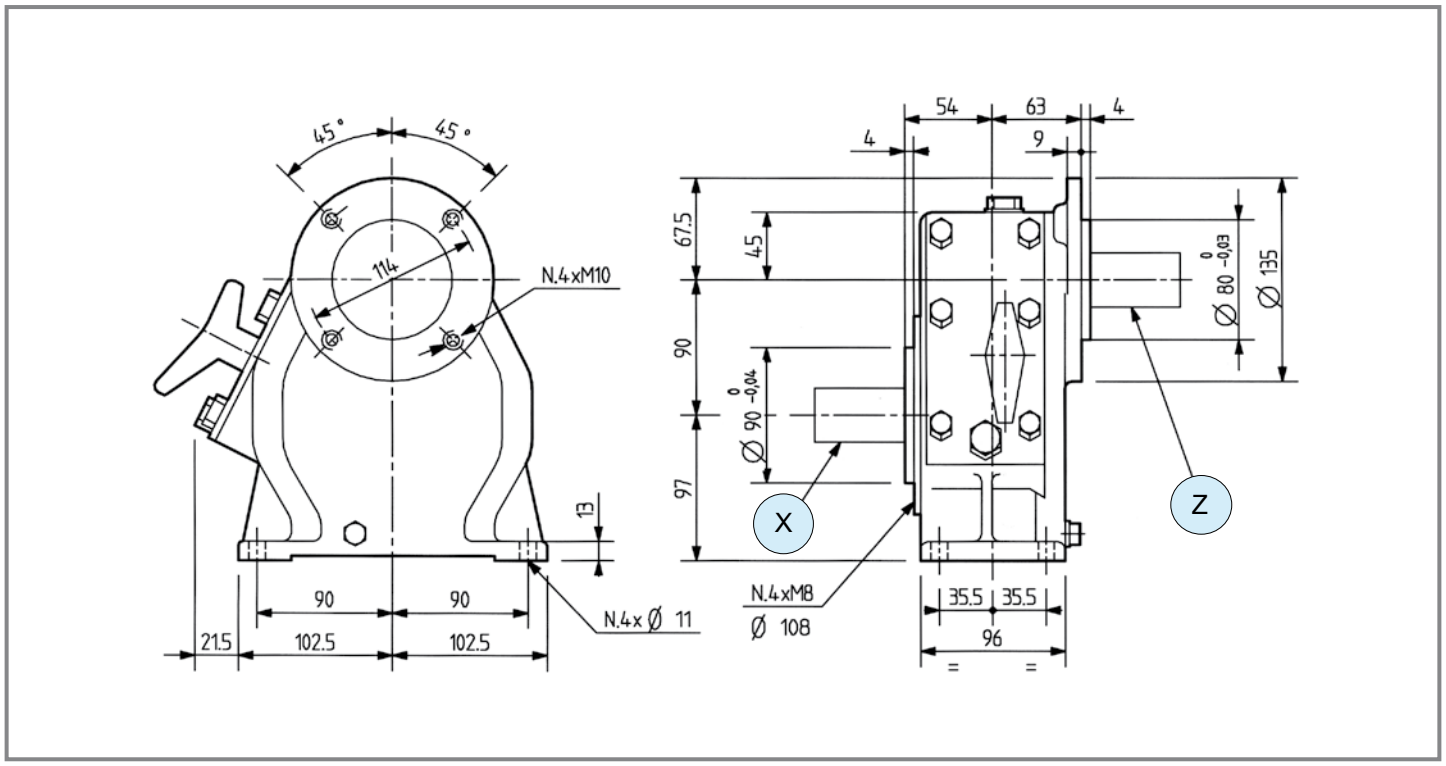

	i	N_1 [rpm]	P_1 [kW]	M_2 [Nm]	Shaft type X	Shaft type Y	Shaft type Z	Input	Features	Code	Mounting	
M	**5.82**	540	16.2	48	1 1" 3/8 Z6	-	54 35	X	-	9.707.354	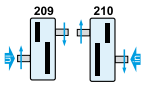	special
M	**4.36**	540	21.3	84	1 1" 3/8 Z6	-		X	-	-	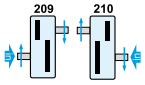	special
M	**4.00**	540	21.7	93	1 1" 3/8 Z6	-		X	-	-	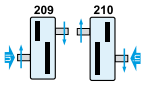	special

comer industries

D-7B

Code **707**

(3.01)

[kg]	18	[l]	1.0

Per configurazioni non a catalogo contattare Servizio Tecnico-Commerciale
For non-catalog configurations contact Technical-Commercial Service

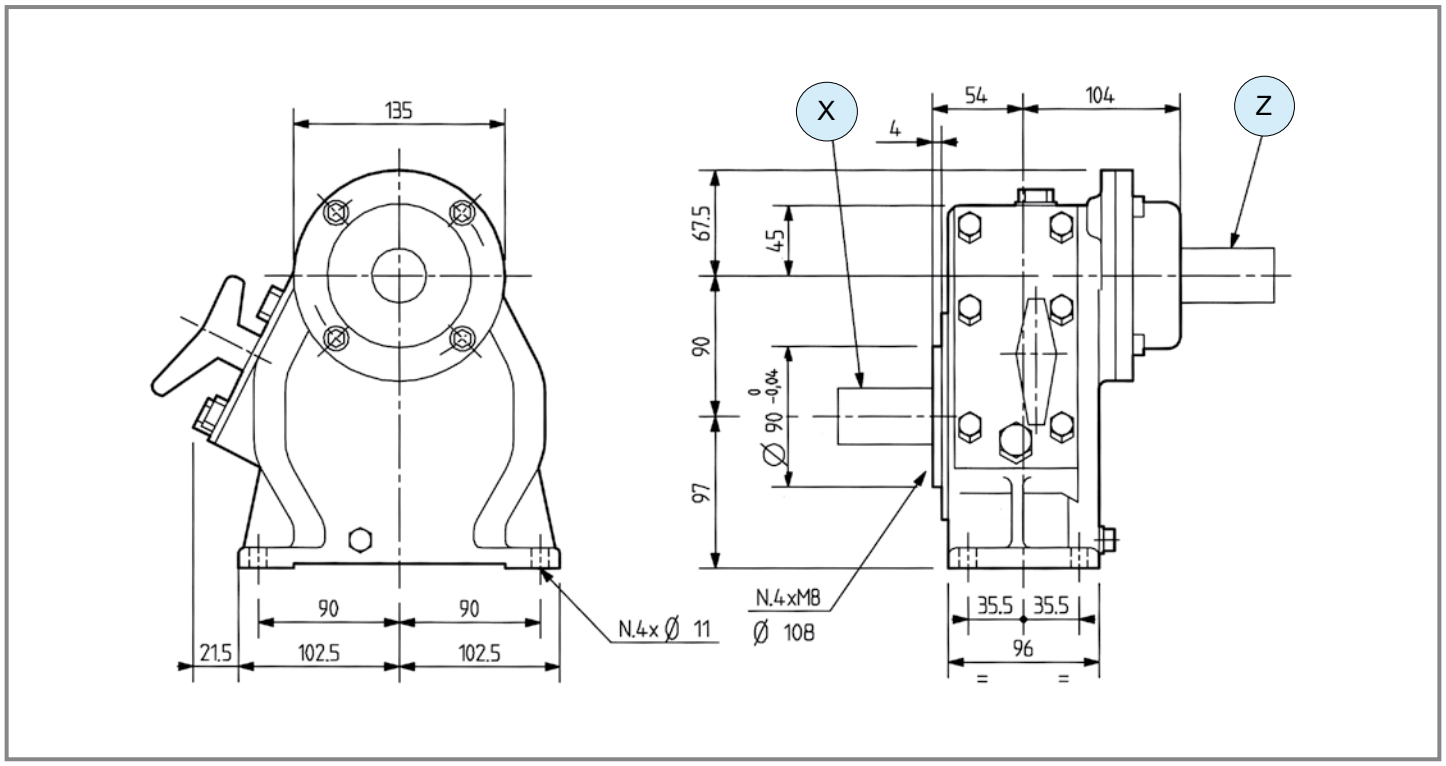

	i	N_1 [rpm]	P_1 [kW]	M_2 [Nm]	Shaft type X	Shaft type Y	Shaft type Z	Input	Features	Code	Mounting	
M	**5.25**	540	20.6	67	1 1" 3/8 Z6	-		X	-	-	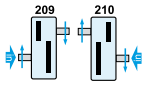	special
M	**4.36**	540	21.3	83	1 1" 3/8 Z6	-		X	-	-	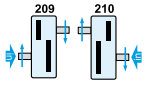	special
M	**4.00**	540	21.7	95	1 1" 3/8 Z6	-	55 40	X	-	9.707.333	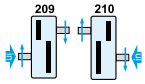	special

D-27A

Code **727**

(3.01)

[kg] 22.5 | [l] 1.3

Per configurazioni non a catalogo contattare Servizio Tecnico-Commerciale
For non-catalog configurations contact Technical-Commercial Service

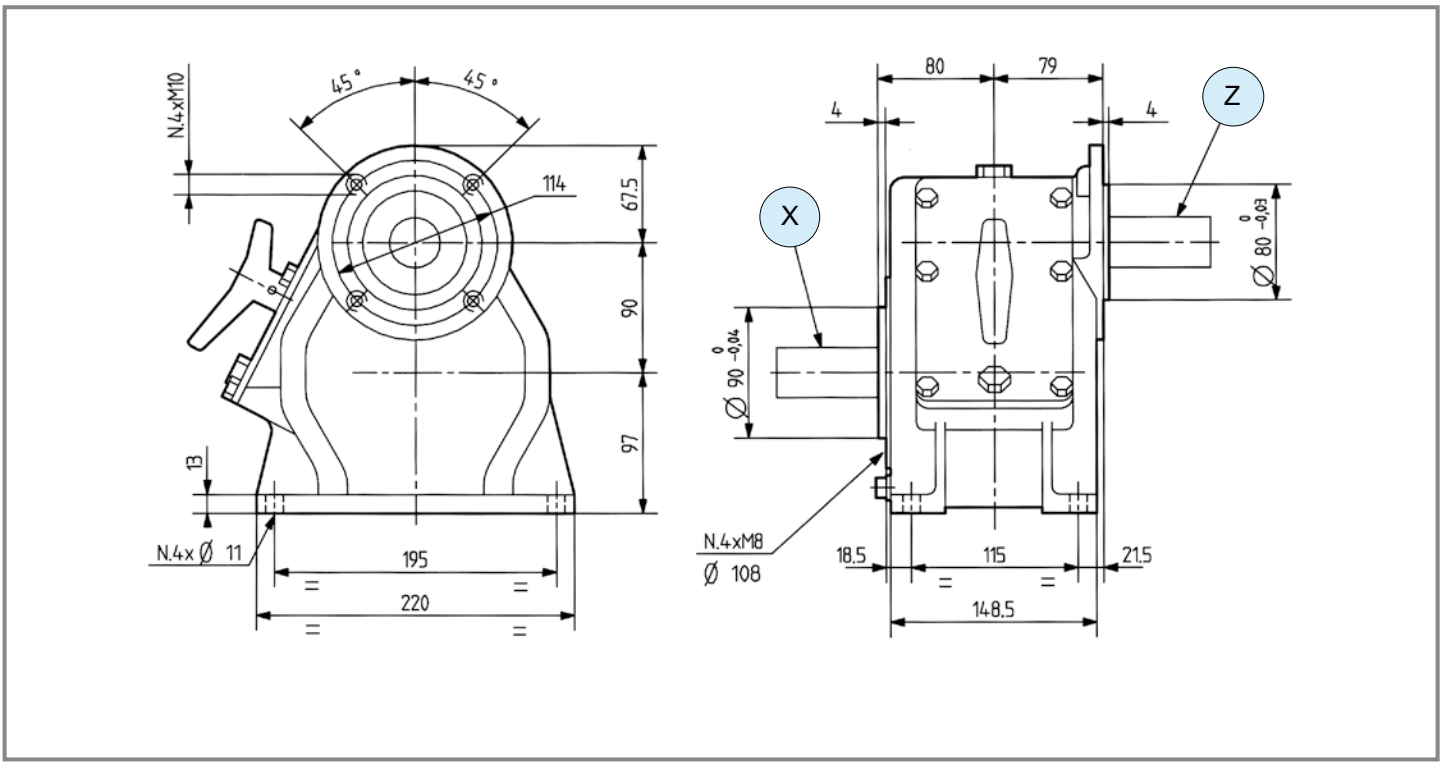

	i	N_1 [rpm]	P_1 [kW]	M_2 [Nm]	Shaft type X	Shaft type Y	Shaft type Z	Input	Features	Code	Mounting	
M	**4.00 5.25**	540	22.1		1 — 1" 3/8 Z6	-		X	-	-		special
M	**3.70 4.80**	540	22.1	-	1 — 1" 3/8 Z6	-	54 — L 250 — 28	X	-	9.727.336		special
M	**3.70 4.40**	540	22.1	-	1 — 1" 3/8 Z6	-	54 — L 117 — 28	X	-	9.727.319		special
	2.95 4.00	540	22.1		1 — 1" 3/8 Z6	-		X	-	-		special

D-27J

Code **727.8**

D-27B

Code **727**

(3.01)

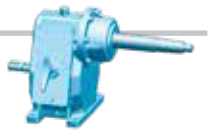

[kg]	25	[l]	1.3
[kg]	25	[l]	1.3

Per configurazioni non a catalogo contattare Servizio Tecnico-Commerciale
For non-catalog configurations contact Technical-Commercial Service

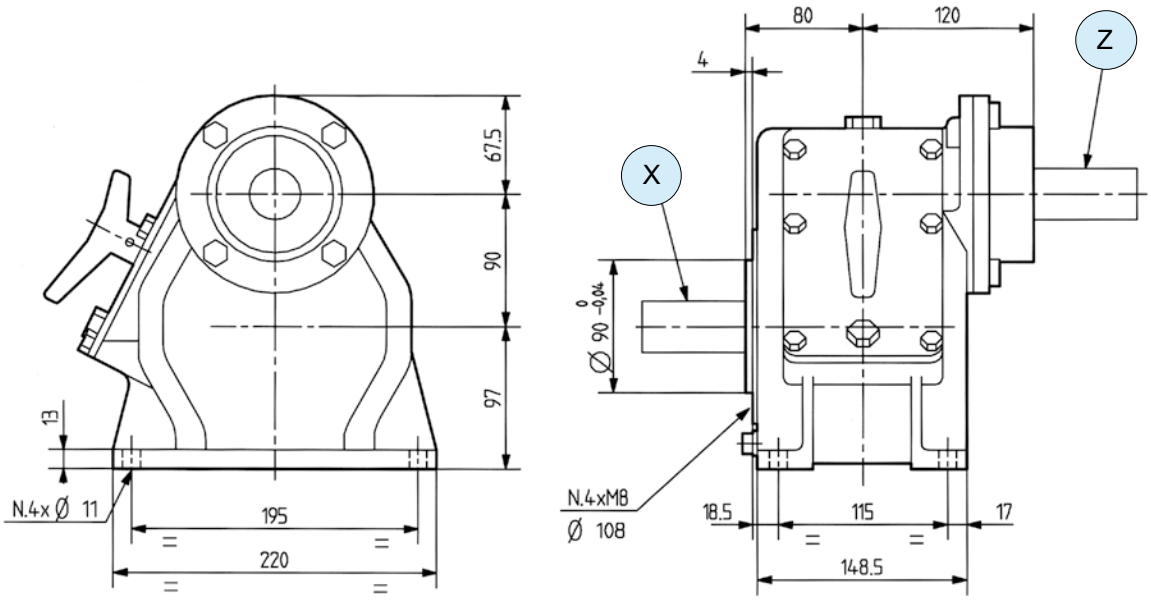

	i	N_1 [rpm]	P_1 [kW]	M_2 [Nm]	Shaft type X	Shaft type Y	Shaft type Z	Input	Features	Code	Mounting	
M ⇨ +	**4.00 5.25**	540	22.1	-	1 — 1" 3/8 Z6	-	18 — L 200 — ø 30	X	-	9.727.308	81 87	special
	3.69 4.36	540	22.1	-	1 — 1" 3/8 Z6	-	55 — L 253 — 40	X	-	9.727.000	81 87	special
	2.95 4.00	540	22.1	-	1 — 1" 3/8 Z6	-	55 — L 200 — 40	X	-	9.727.820	81 87	special
	2.95 4.00	540	22.1	-	1 — 1" 3/8 Z6	-	55 — L 250 — 40	X	-	9.727.881	81 87	special

D-21A

Code **721**

(3.01)

[kg] 31 | [l] 1.8

Per configurazioni non a catalogo contattare Servizio Tecnico-Commerciale
For non-catalog configurations contact Technical-Commercial Service

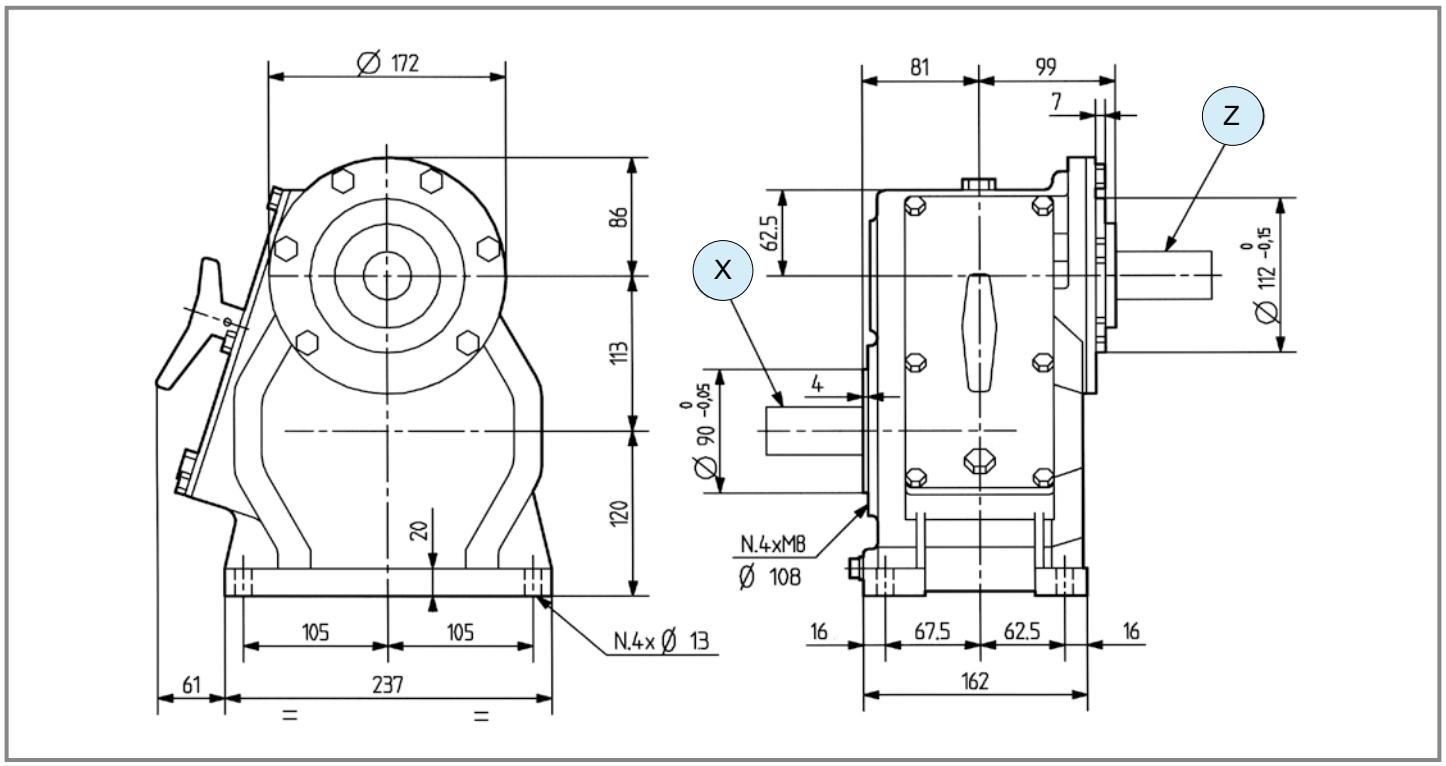

	6 - Cambio facilitato / *Easy Shift*											
	i	N_1 [rpm]	P_1 [kW]	M_2 [Nm]	Shaft type X	Shaft type Y	Shaft type Z	Input	Features	Code	Mounting	
M	6.95 7.45	540	26.5	-	1 1" 3/8 Z6	-	54 L 108 35	X	-	9.721.395		special
	3.90 4.90	540	40.5	-	1 1" 3/8 Z6	-	54 L 271.5 30	X	-	9.721.449		special
	3.60 4.50	540	40.5	-	1 1" 3/8 Z6	-	55 L 273 40	X	-	9.721.329		special
	3.60 4.50	540	40.5	-	1 1" 3/8 Z6	-	54 L 270 35	X	-	9.721.007		special
	3.60 4.50	540	47.8	-	1 1" 3/8 Z6	-	54 L 100 35	X	6	9.721.485		special

comer industries

D-21B

Code **721**

D-21F

Code **721**

(3.01)

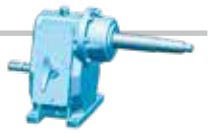

[kg]	31	[l]	-
[kg]	37	[l]	1.8

Per configurazioni non a catalogo contattare Servizio Tecnico-Commerciale
For non-catalog configurations contact Technical-Commercial Service

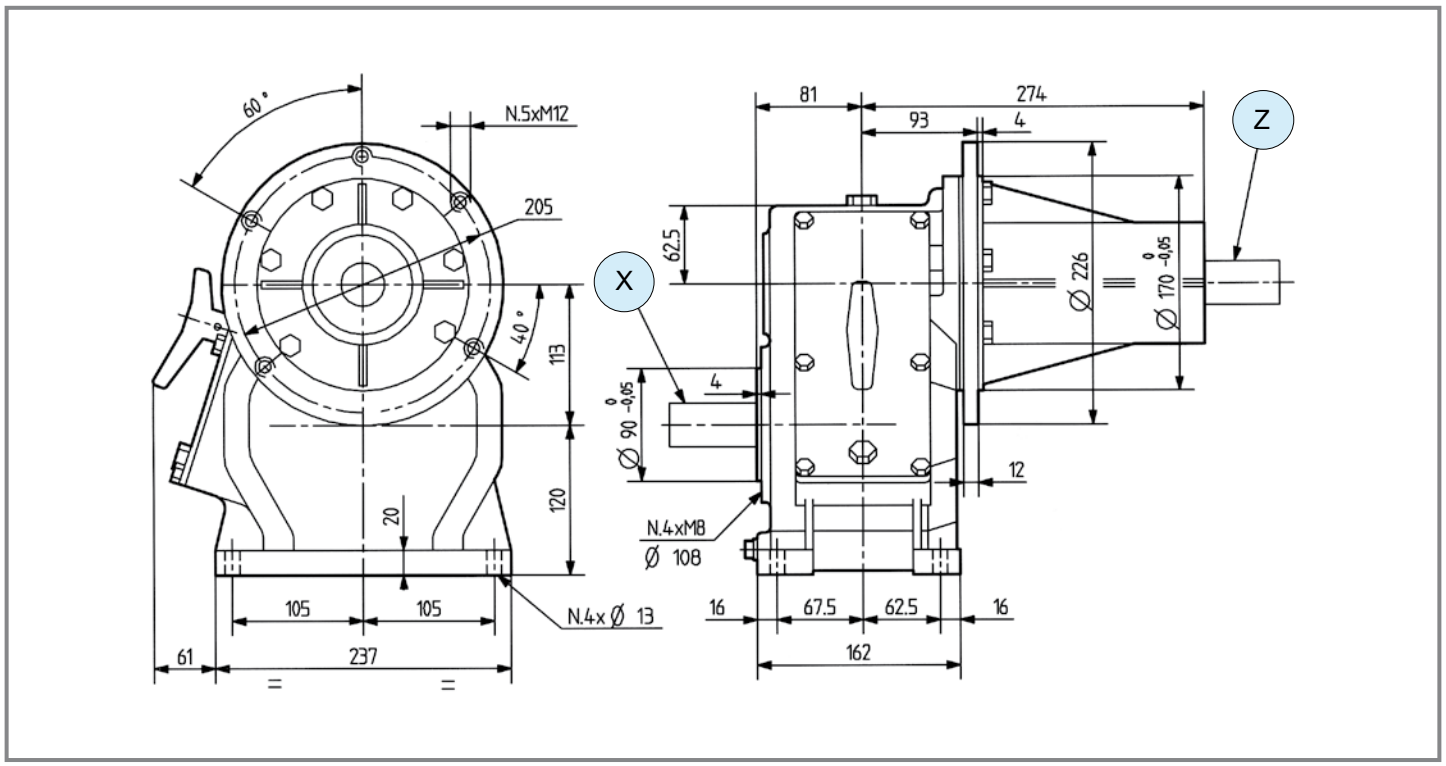

	i	N_1 [rpm]	P_1 [kW]	M_2 [Nm]	Shaft type X	Shaft type Y	Shaft type Z	Input	Features	Code	Mounting	
					5 - Rinfozato / Reinforced	*6 - Cambio facilitato / Easy Shift*						
M	**3.90 4.90**	540	38.9	-	1 — 1" 3/8 Z6	-	54 — L 270 — 35	X	-	9.721.333	209 210	special
M	**3.60 4.50**	540	40.5	-	1 — 1" 3/8 Z6	-	55 — L 165 — 40	X	-	9.721.413	209 210	special
M	**3.60 4.50**	540	47.8	-	1 — 1" 3/8 Z6	-	55 — L 286 — 40	X	5	9.721.433	209 210	special
	2.90 3.90	540	41.2	-	1 — 1" 3/8 Z6	-	54 — L 221 — 35	X	6	9.721.483	209 210	special

D-21A

Code **721**

(3.01)

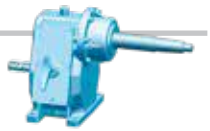

[kg]	31	[l]	1.8

Per configurazioni non a catalogo contattare Servizio Tecnico-Commerciale
For non-catalog configurations contact Technical-Commercial Service

Doppia uscita controrotante.
Double output counter rotating.

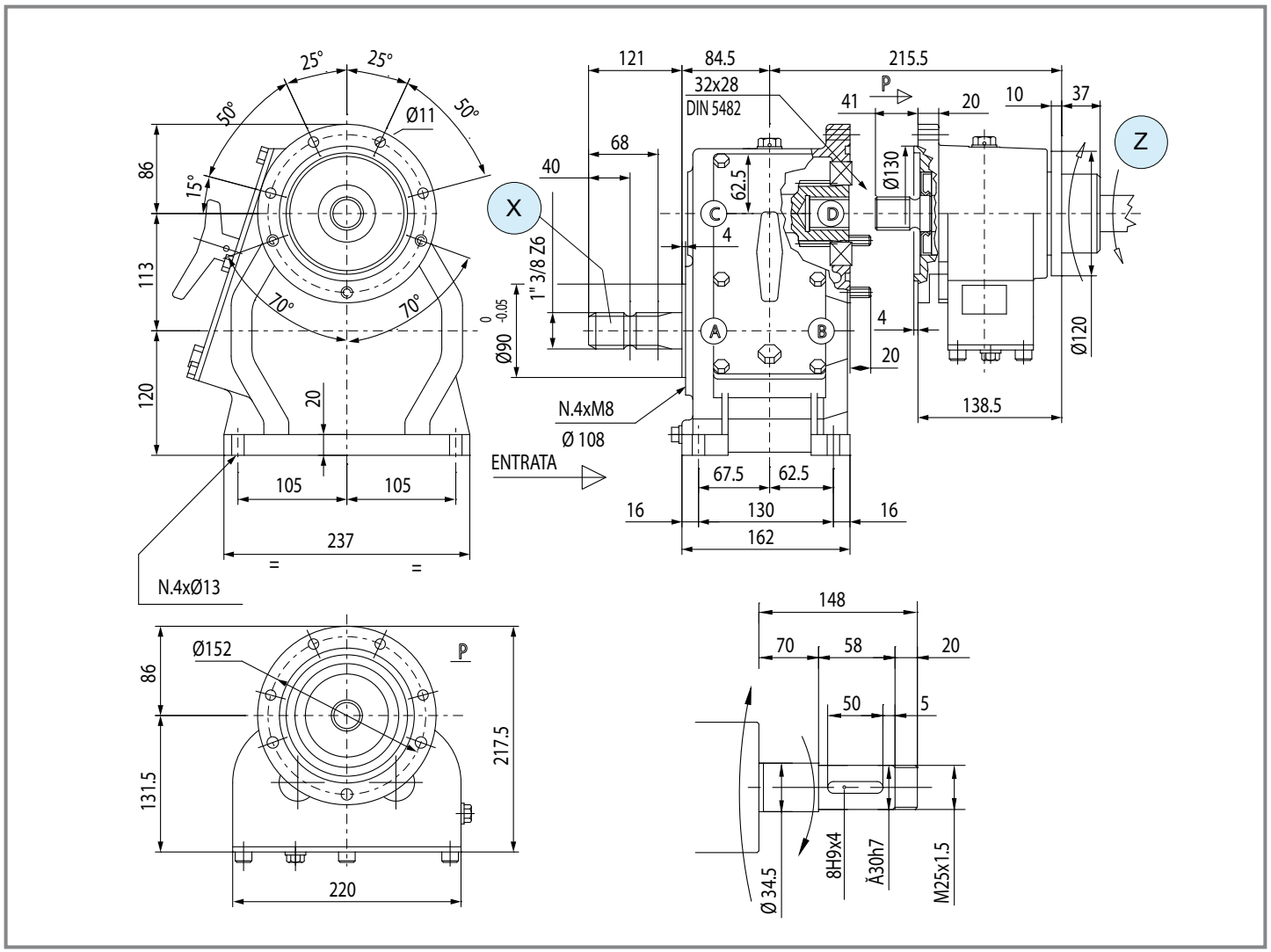

	i	N_1 [rpm]	P_1 [kW]	M_2 [Nm]	Shaft type X	Shaft type Y	Shaft type Z	Input	Features	Code	Mounting	
M	**3.60** **4.93**	540	40.5	-	1	-	54 12	X	-	9.721.516 + 9.773.009	-	special

comer industries

Questa pagina è lasciata intenzionalmente bianca
This page is intentionally left blank

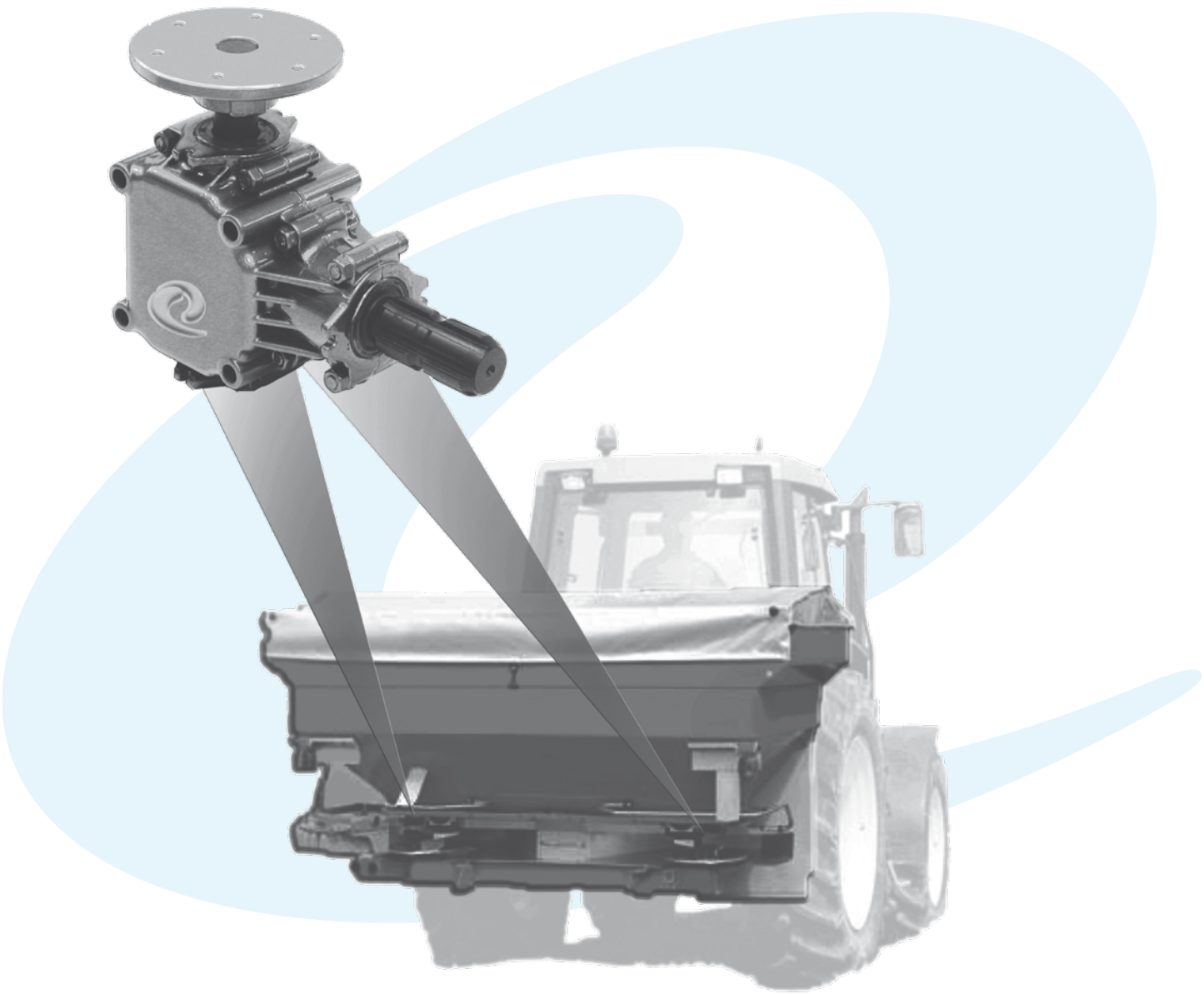

Per configurazioni non a catalogo contattare Servizio Tecnico-Commerciale
For non-catalog configurations contact Technical-Commercial Service

	i	$P_{1\text{ - max}}$ [kW]	$M_{2\text{ - max}}$ [Nm]	Tipologia alberi disponibili *Available type of shafts*	p.
L-150J	M + - - = = 1.00 R + -	8.0	140	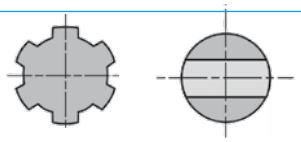	166
L-150C	M + 1.35 - = = - R + -	9.9	126	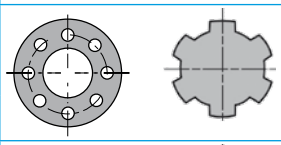	167
L-25C	M + 1.35 - = = - R + -	9.9	126	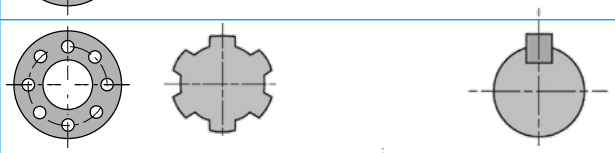	168
L-25J	M + 1.35 - = = 1.00 R + -	11.0	189	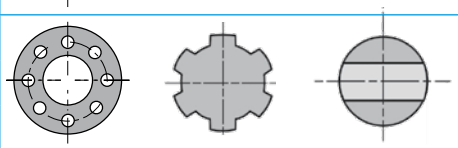	169

L-150J

Code **150.8**

(3.02)

[kg] 3.5 | GREASE [kg] 0.2

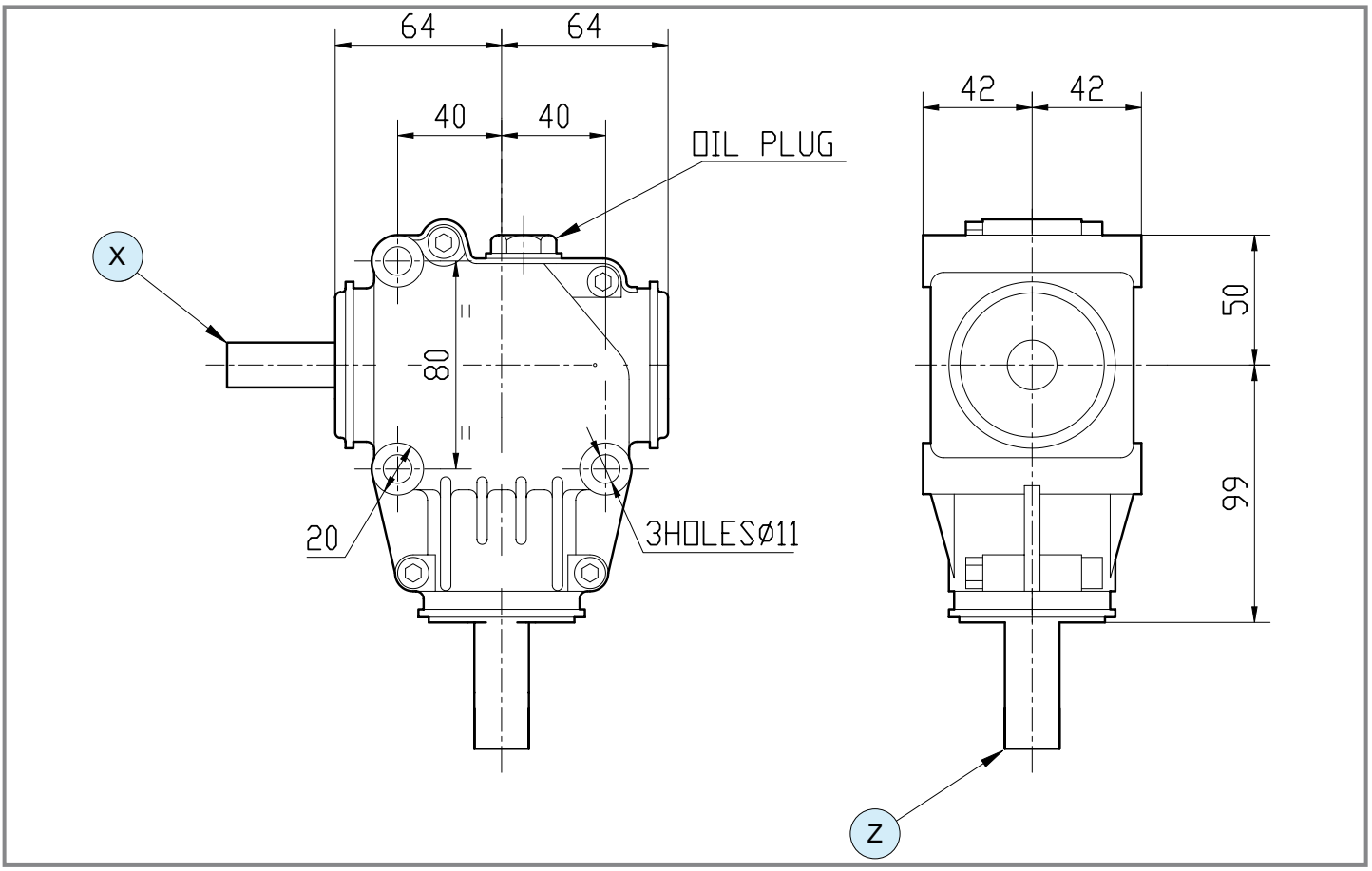

	i	N_1 [rpm]	P_1 [kW]	M_2 [Nm]	Shaft type X	Shaft type Y	Shaft type Z	Input	Lenght	Code	Mounting	
-	**1.00**	540	8.0	140	13	-	1	Z	-	9.150.800	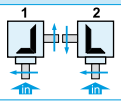	std

comer industries

L-150C

Code **150**

(3.02)

[kg] 15 | [kg] 0.2x3

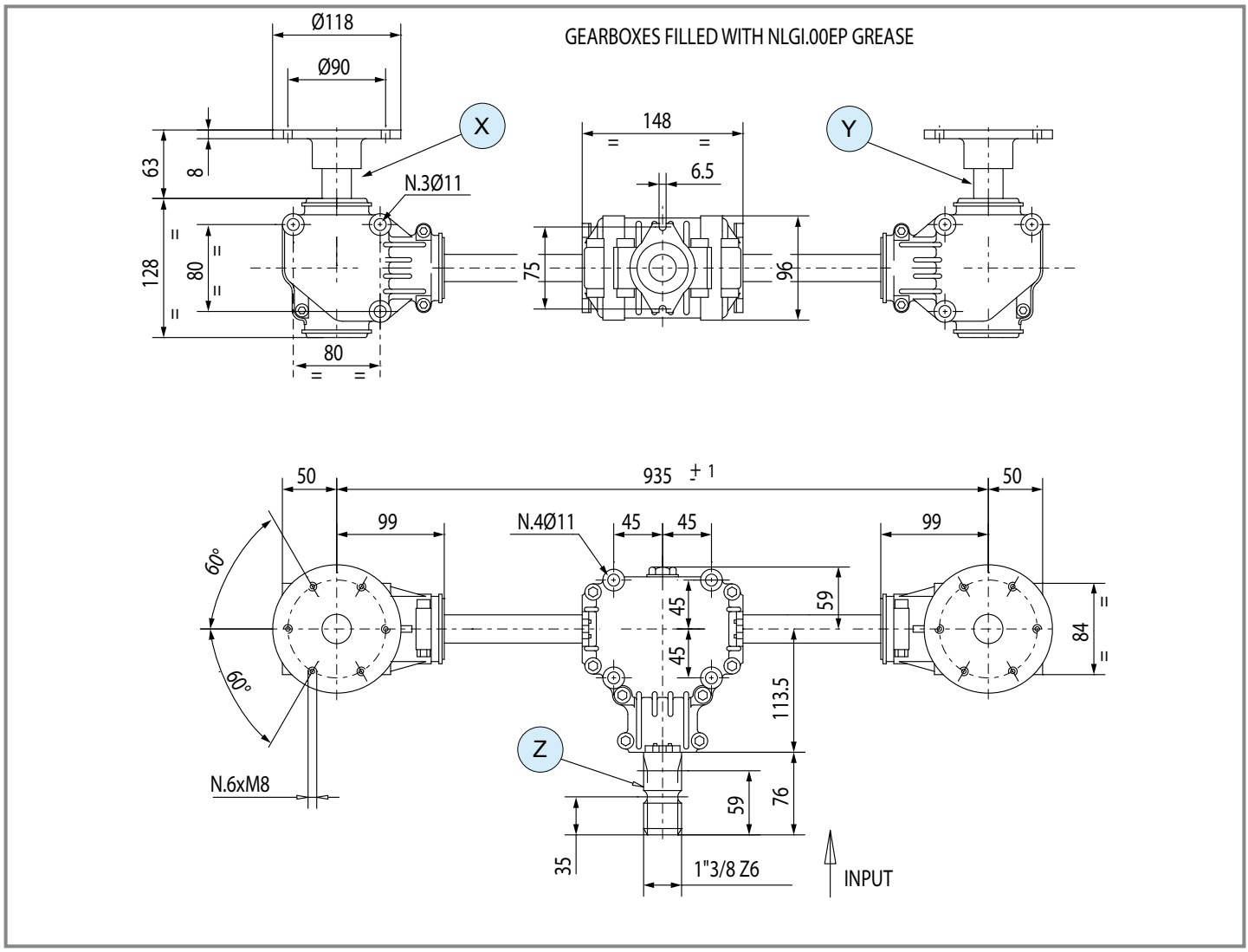

	i	N_1 [rpm]	P_1 [kW]	M_2 [Nm]	Shaft type X	Shaft type Y	Shaft type Z	Input	Lenght	Code	Mounting	
M	**1.35**	540	9.9	126			1 1" 3/8 Z6	Z	935	9.150.013	223	std

L-25C

Code **124**

(3.02)

[kg] 17 | [kg] 0.35x3

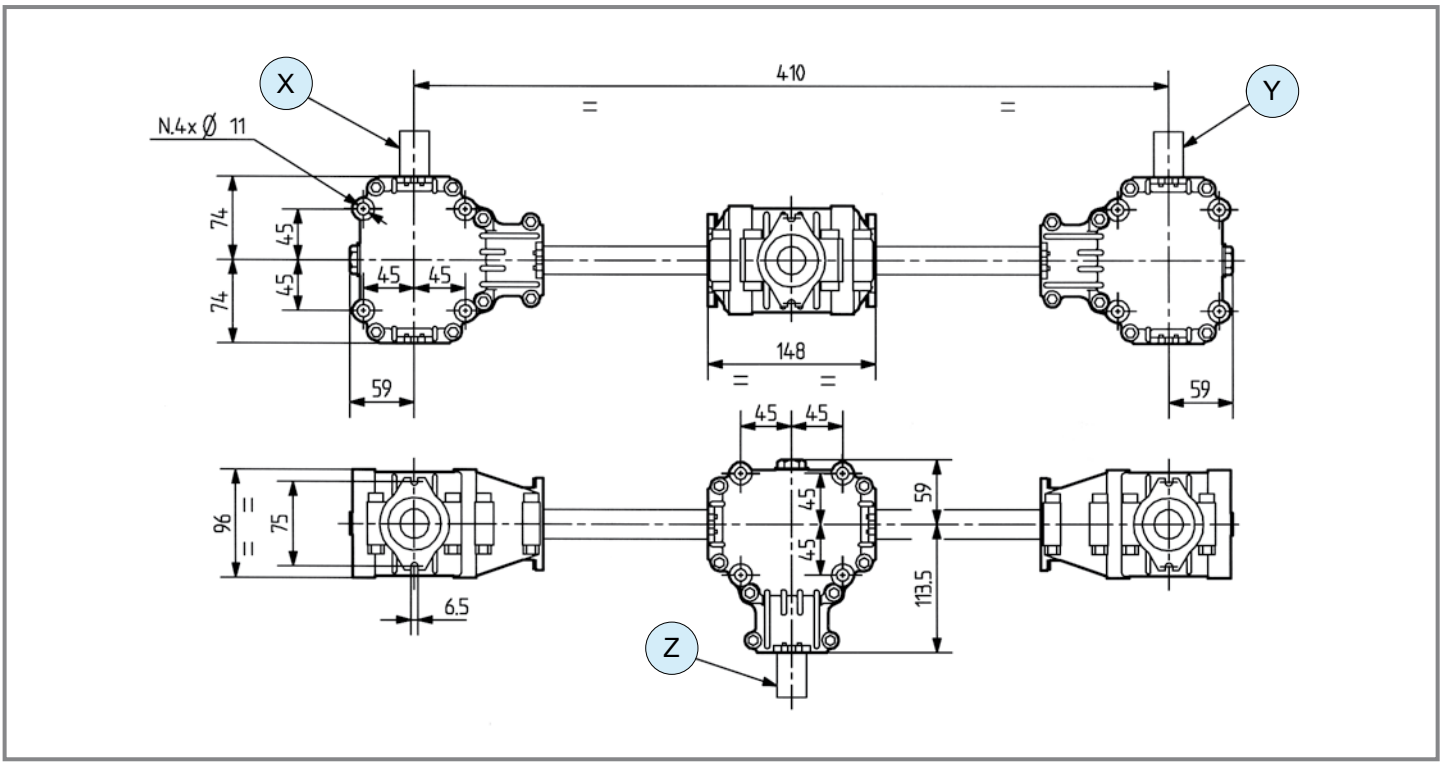

	i	N_1 [rpm]	P_1 [kW]	M_2 [Nm]	Shaft type X	Shaft type Y	Shaft type Z	Input	Lenght	Code	Mounting	
M	**1.35**	540	9.9	126	12 L 166 ø 25	12 L 166 ø 25	1 1" 3/8 Z6	Z	410	9.124.369	223	std
	1.35	540	9.9	126			1 1" 3/8 Z6	Z	410	9.124.326	223	std

L-25J

Code **124.8**

(3.02)

[kg] 4.1 | [l] 0.35

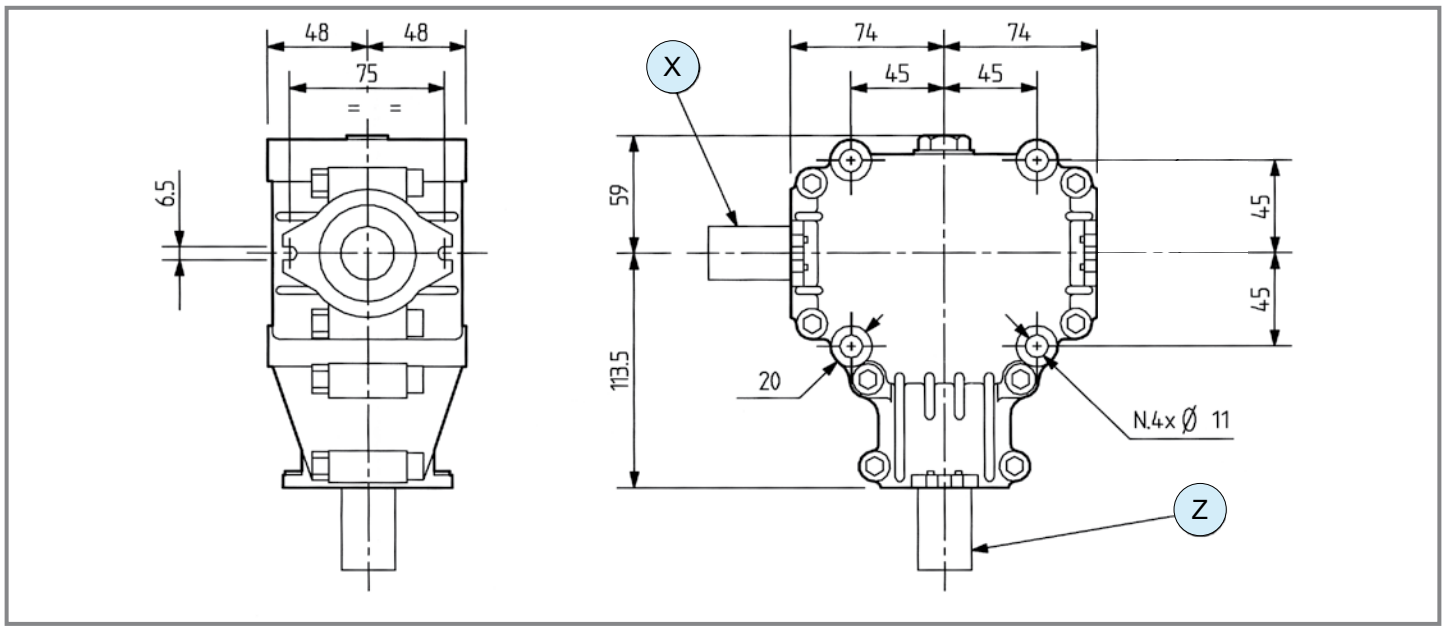

	i	N_1 [rpm]	P_1 [kW]	M_2 [Nm]	Shaft type X	Shaft type Y	Shaft type Z	Input	Lenght	Code	Mounting	
M	**1.35**	540	9.9	126	13 ø 25 n.2 ø8	-	1 1" 3/8 Z6	Z	-	9.124.880	21 22	std
	1.00	540	11.0	189	13 L 165 ø 25 n.2 ø8	-	1 1" 3/8 Z6	Z	-	9.124.870	1 2	std
-	**1.00**	540	11.0	189		-	1 1" 3/8 Z6	Z	-	9.124.803	1 2	std
	1.00	540	11.0	189	13 L 70 ø 25 n.2 ø8	-	1 1" 3/8 Z6	Z	-	9.124.800	1 2	std

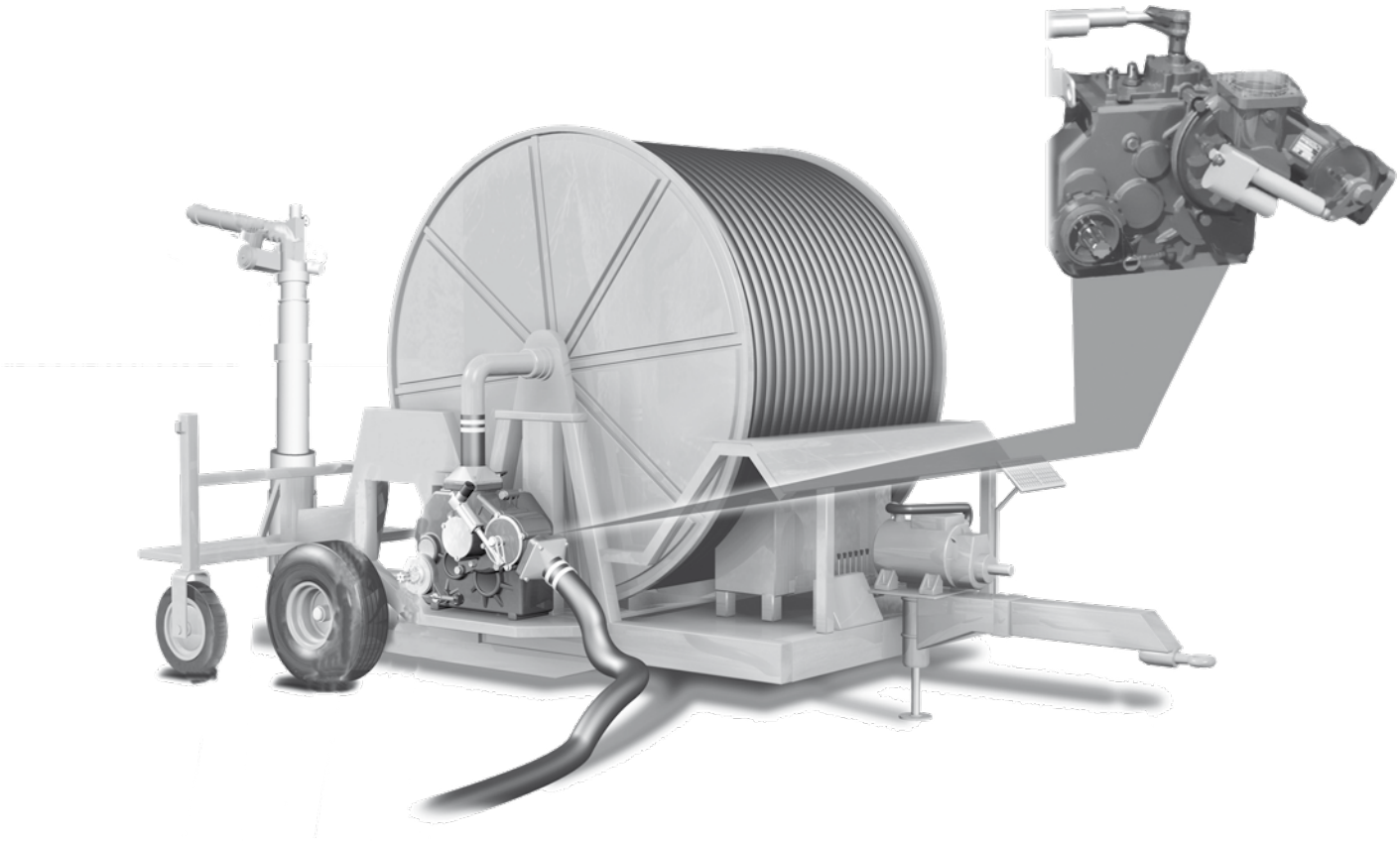

(3.03) Pompe centrifughe per irrigazione
Centrifugal pumps for irrigations

(3.04) Irrigatori a bobina / *Irrigations reels*

Per configurazioni non a catalogo contattare Servizio Tecnico-Commerciale
For non-catalog configurations contact Technical-Commercial Service

		i	P_{1-max} [kW]	M_{2-max} [Nm]	Tipologia alberi disponibili *Available type of shafts*	p.
A-4A	M	5.00÷6.20	55.2	189	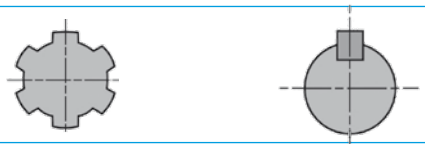	172
	-	-				
	R	-				
A-629A	M	1.77÷3.80	130	680	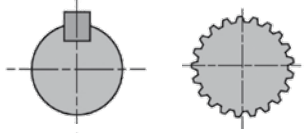	173
	-	-				
	R	-				
D-741A	M	-	-	50	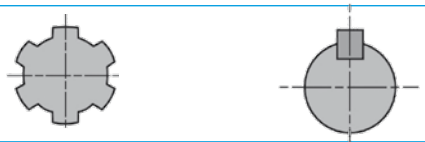	174
	-	-				
	R	1.6				
D-743A	M	-	-	250		175
	-	-				
	R	97÷631				
D-745A	M	-	-	700	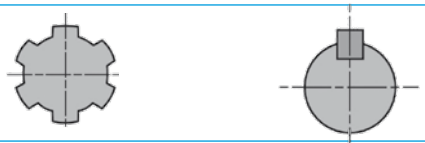	176
	-	-				
	R	117÷766				
DTU-745A	M	-	-	700		177
	-	-				
	R	117÷766				
D-744A	M	-	-	1100	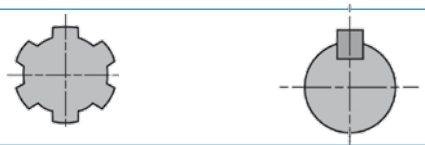	178
	-	-				
	R	119÷781				
DTU-744A	M	-	-	1100	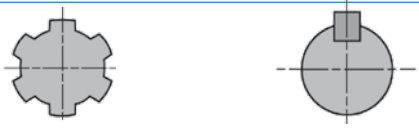	179
	-	-				
	R	120÷781				
D-742A	M	-	-	2100	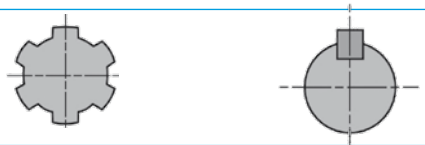	180
	-	-				
	R	115÷756				
DTU-742A	M	-	-	2100	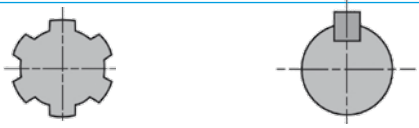	181
	-	-				
	R	116÷756				

A-4A

Code **603**

(3.03)

kg [kg]	41	OIL [l]	1.0

Per configurazioni non a catalogo contattare Servizio Tecnico-Commerciale
For non-catalog configurations contact Technical-Commercial Service

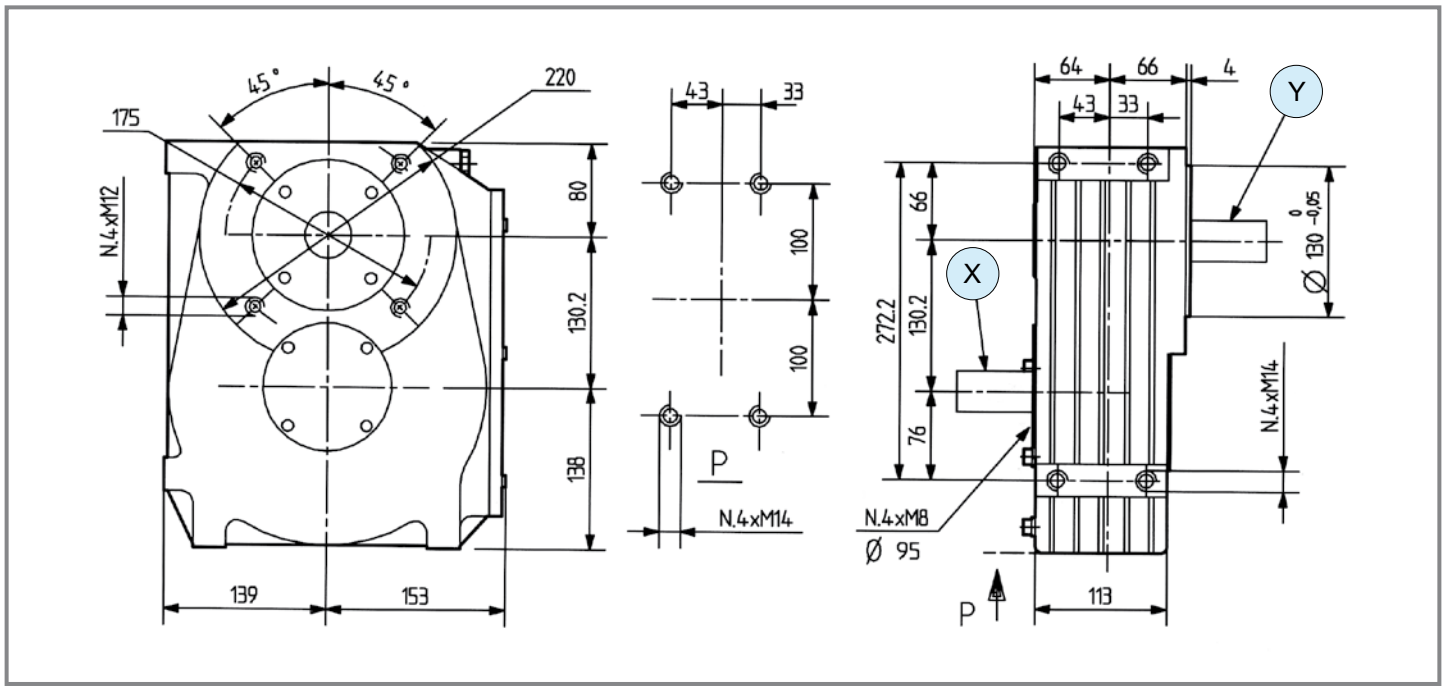

	i	N_1 [rpm]	P_1 [kW]	M_2 [Nm]	Shaft type X	Shaft type Y	Shaft type Z	Input	Features	Code	Mounting	
M	**6.20**	540	51.2	142	1 1" 3/8 Z6	3 L 91 ø 35	-	X	-	9.603.005	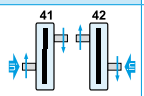	std
	5.00	540	55.2	189	1 1" 3/8 Z6	3 L 85 ø 35	-	X	-	9.603.000	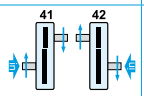	std

comer industries

A-629A

Code **629**

(3.03)

[kg] 71.3 | [l] -

Per configurazioni non a catalogo contattare Servizio Tecnico-Commerciale
For non-catalog configurations contact Technical-Commercial Service

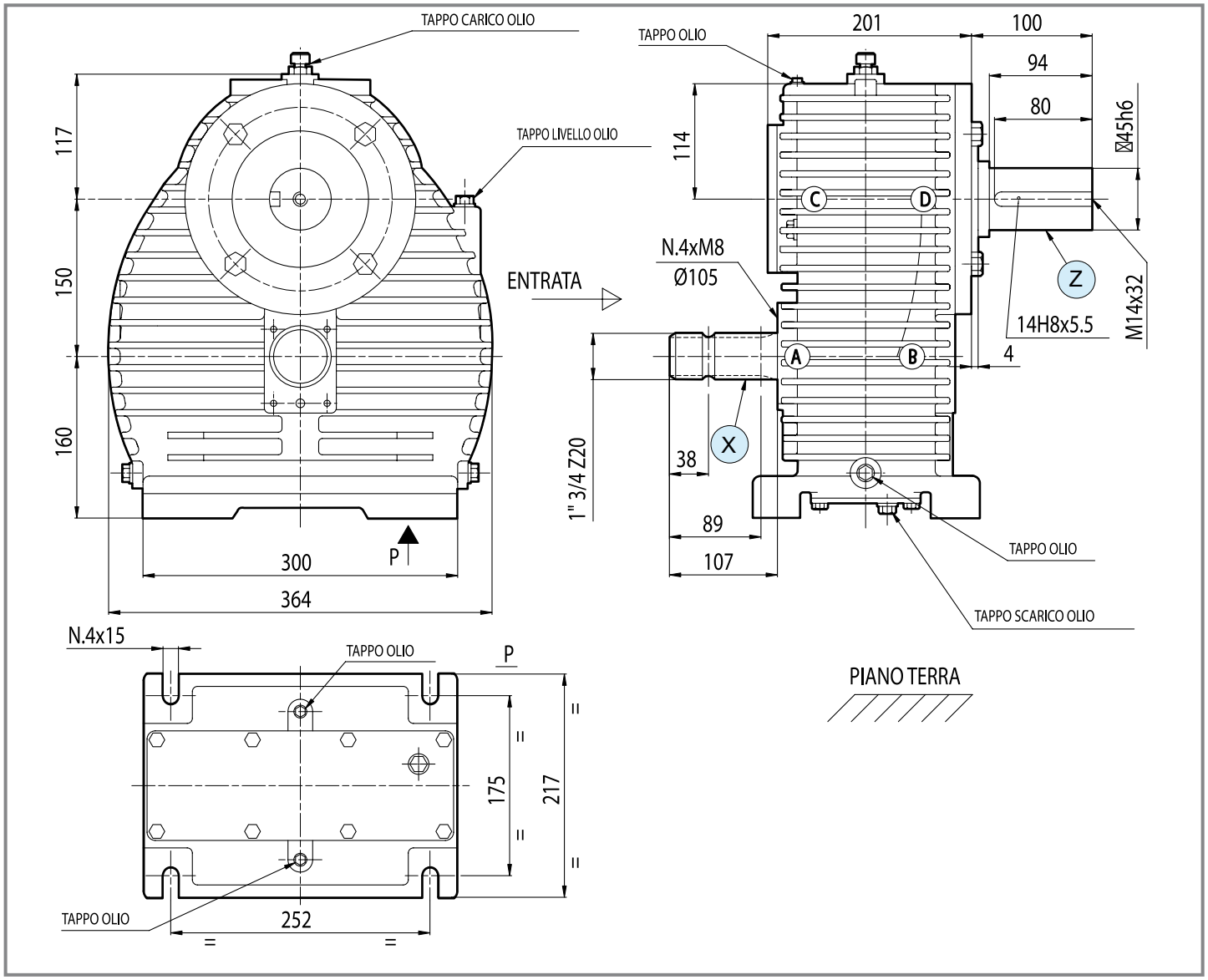

	i	N_1 [rpm]	P_1 [kW]	M_2 [Nm]	Shaft type X	Shaft type Y	Shaft type Z	Input	Features	Code	Mounting	
M	**3.80**	540	110.0	497	6 1" 3/4 Z20	-	21 L 94 ø 45	X	-	9.629.302	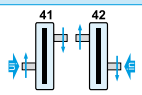	special
	1.77	1000	130.0	680	6 1" 3/4 Z20	-	43 L 64 ø 65	X	-	9.629.304	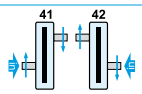	special

D-741A

Code **741**

(3.04)

[kg]	10	[l]	-

Per configurazioni non a catalogo contattare Servizio Tecnico-Commerciale
For non-catalog configurations contact Technical-Commercial Service

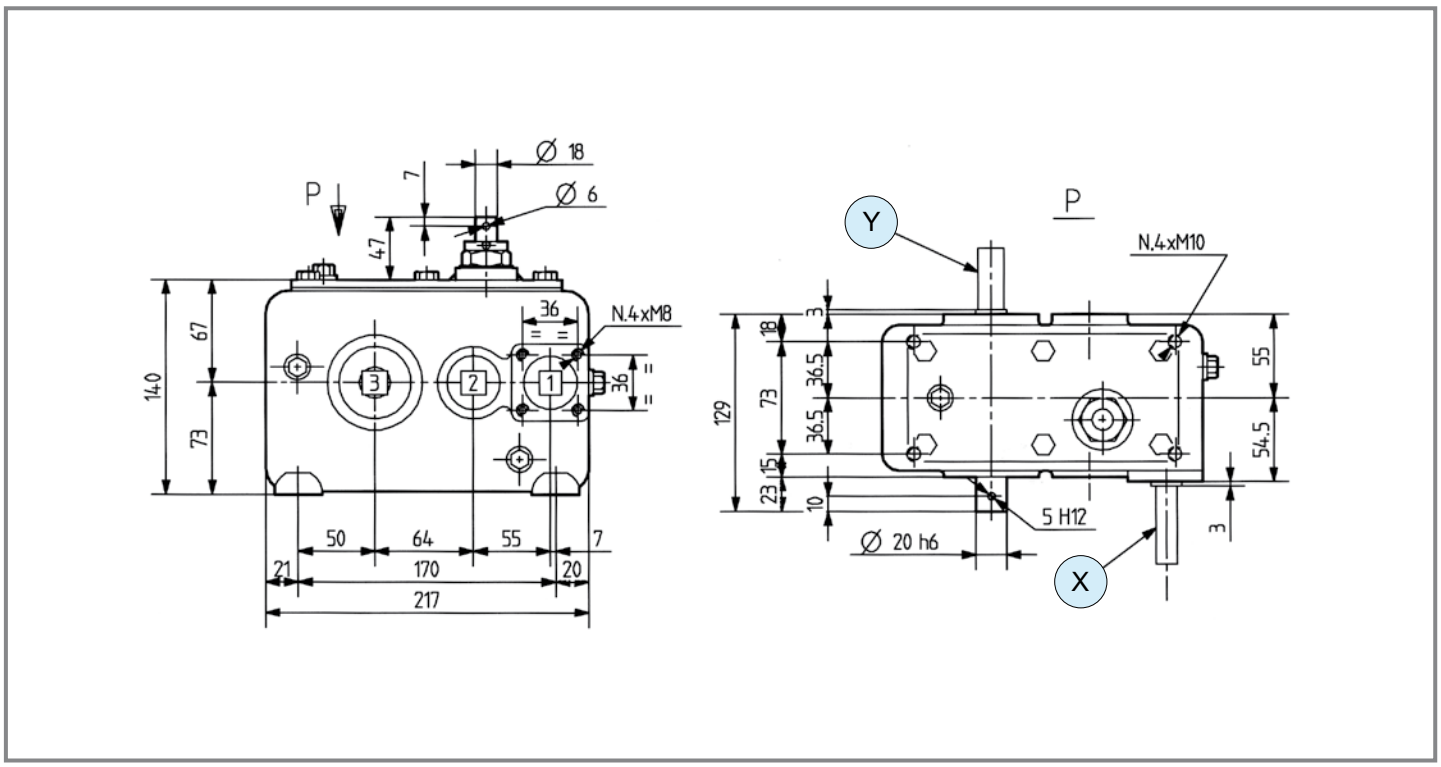

	i	M_2 [Nm]	Shaft type X	Shaft type Y	(i) P.T.O.	P.T.O.	Input	Features	Pin (on/off)	Code	Mounting	
R	**1.60**	50	45 L 54 ø 14	44 L 40 ø 18	1:1	1 1" 3/8 Z6	X	-	-	9.741.000	K	special

comer industries

D-743A

Code **743**

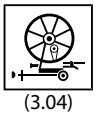

(3.04)

[kg]	29.5	[l]	-

Per configurazioni non a catalogo contattare Servizio Tecnico-Commerciale
For non-catalog configurations contact Technical-Commercial Service

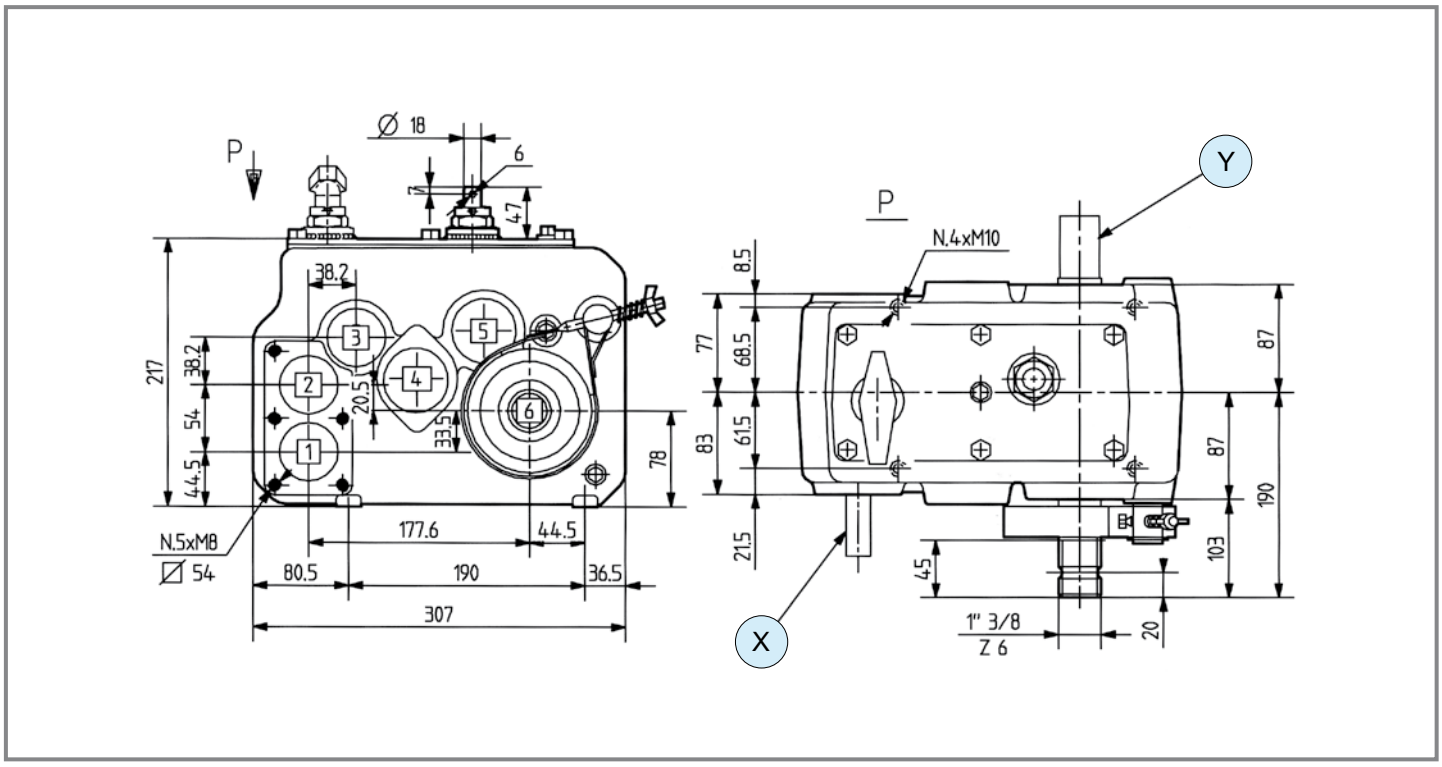

	i	M_2 [Nm]	Shaft type X	Shaft type Y	(i) P.T.O.	P.T.O.	Input	Features	Pin (on/off)	Code	Mounting	
R	97 201 291 631	250	46 L 50 ø 19	18 L 50 ø 30	1:1	1 1" 3/8 Z6	X	-	-	9.743.008	J P.T.O.	special
	97 201	250	46 L 50 ø 19	18 L 50 ø 30	1:1	1 1" 3/8 Z6	X	-	-	9.743.015	J P.T.O.	special

D-745A

Code **745**

(3.04)

[kg] 38.5 | [l] -

Per configurazioni non a catalogo contattare Servizio Tecnico-Commerciale
For non-catalog configurations contact Technical-Commercial Service

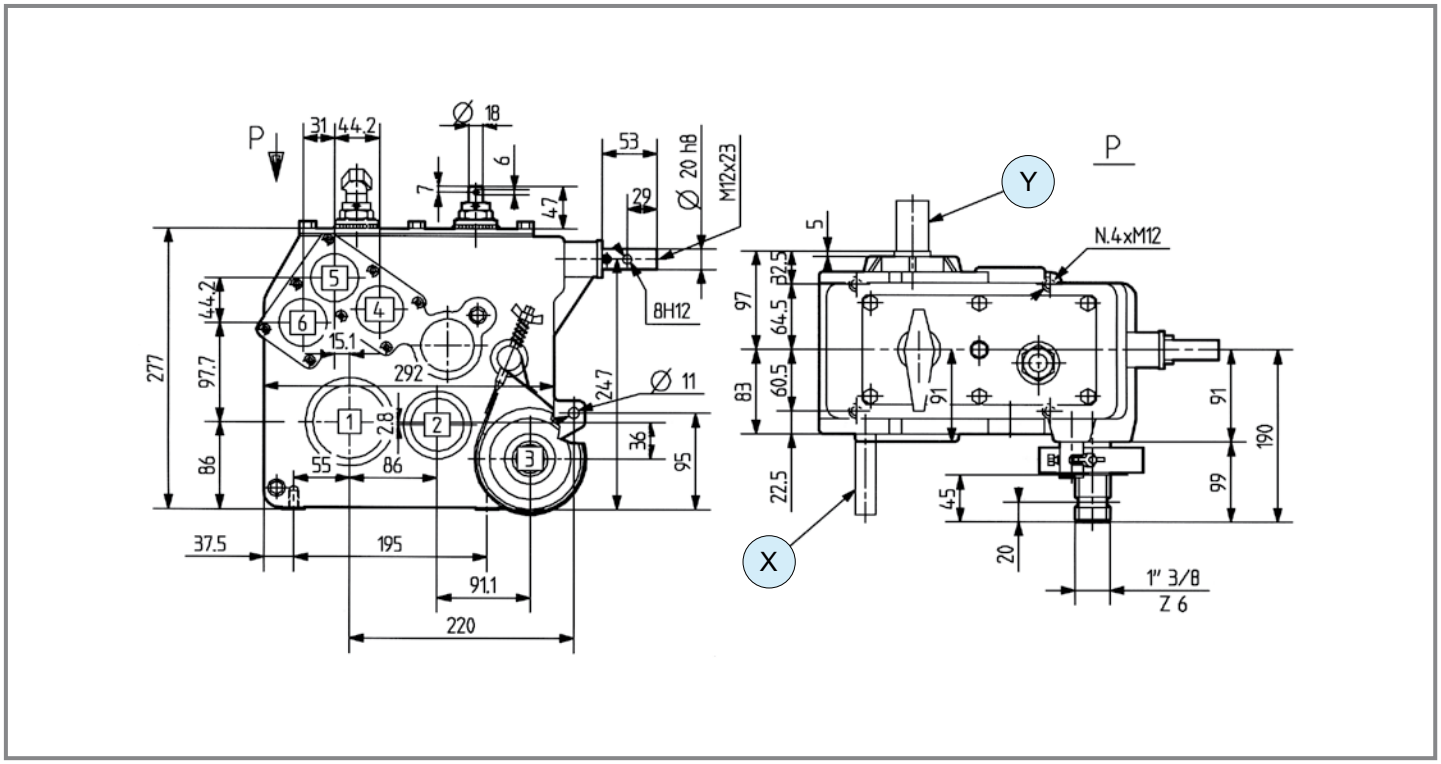

	i	M_2 [Nm]	Shaft type X	Shaft type Y	(i) P.T.O.	P.T.O.	Input	Features	Pin (on/off)	Code	Mounting	
R	118 244 353 766	700	46 L 80 ø 19	47 L 55 ø 32	11:1	1 1" 3/8 Z6	X	-	V	9.745.000	W P.T.O. IN	special
	117 254	700	46 L 80 ø 19	47 L 55 ø 32	11:1	1 1" 3/8 Z6	X	-	V	9.745.021	W P.T.O. IN antiorario ccw	special

comer industries

DTU-745A

Code **745**

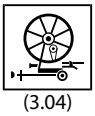

(3.04)

[kg]	61.2	[l]	-

Per configurazioni non a catalogo contattare Servizio Tecnico-Commerciale
For non-catalog configurations contact Technical-Commercial Service

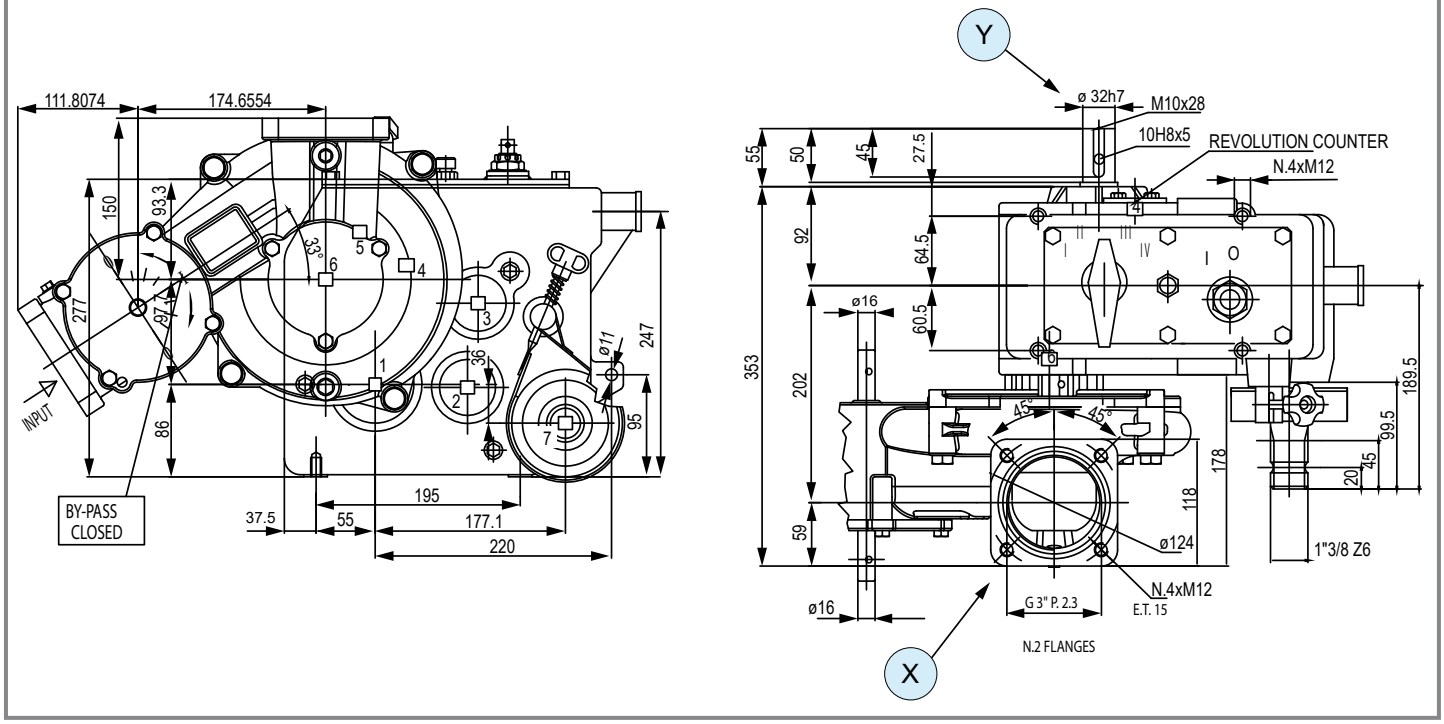

	i	M_2 [Nm]	Shaft type X	Shaft type Y	(i) P.T.O.	P.T.O.	Input	Features	Pin (on/off)	Code	Mounting	
R	118 244 353 766	700	Turbine	47 L 55 ø 32	11:1	1 1" 3/8 Z6	X	-	V	9.745.767	W P.T.O. in	special
R	236 488 706 1532	700	Turbine (low flow)	47 L 55 ø 32	11:1	1 1" 3/8 Z6	X	-	V	9.745.761	W P.T.O. in	special

D-744A

Code **744**

(3.04)

[kg] 54 | [l] -

Per configurazioni non a catalogo contattare Servizio Tecnico-Commerciale
For non-catalog configurations contact Technical-Commercial Service

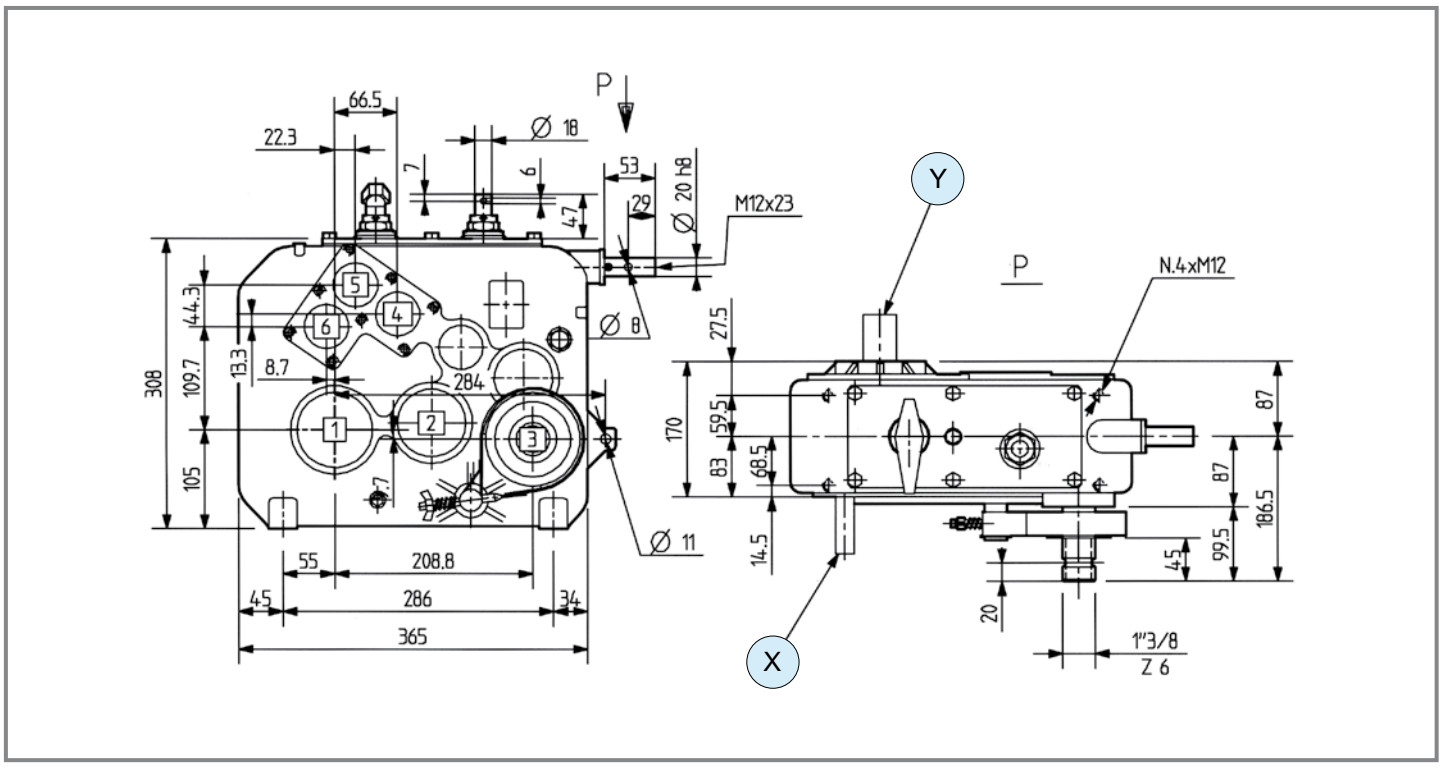

	i	M_2 [Nm]	Shaft type X	Shaft type Y	(i) P.T.O.	P.T.O.	Input	Features	Pin (on/off)	Code	Mounting	
R	120 249 360 781	1100	48 L 74 ø 15	3 L 50 ø 35	11:1	1 1" 3/8 Z6	X	-	-	9.744.059	W P.T.O.	special
	119 260	1100	46 L 80 ø 19	3 L 50 ø 35	11:1	1 1" 3/8 Z6	X	-	V	9.744.023	W P.T.O.	special

comer industries

DTU-744A

Code **744**

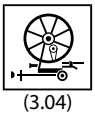

(3.04)

[kg]	72.6	[l]	-

Per configurazioni non a catalogo contattare Servizio Tecnico-Commerciale
For non-catalog configurations contact Technical-Commercial Service

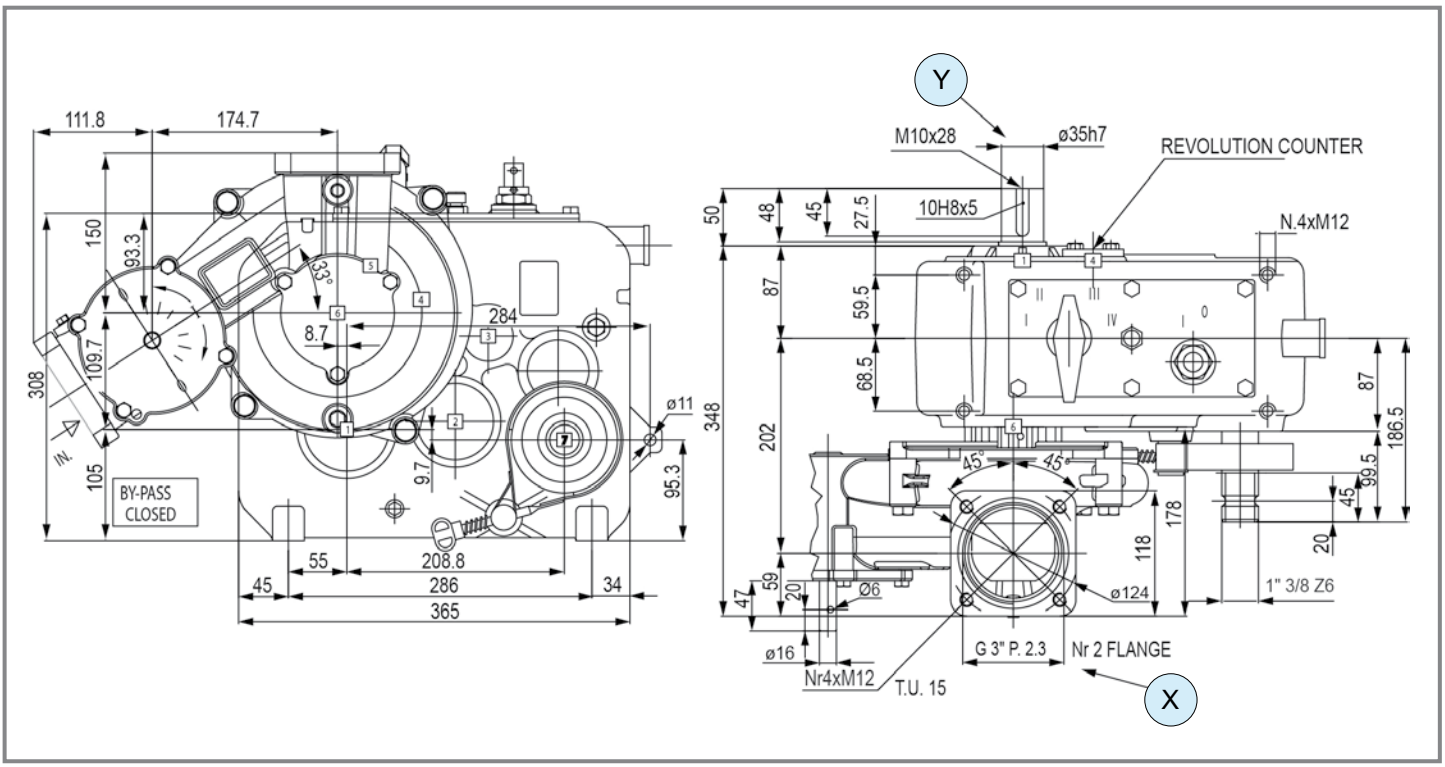

	7 - Attuatore elettrico / *Electric actuator*											
	i	M_2 [Nm]	Shaft type X	Shaft type Y	(i) P.T.O.	P.T.O.	Input	Features	Pin (on/off)	Code	Mounting	
R	120 249 360 781	1100	Turbine	3 L 50 ø 35	11:1	1 1" 3/8 Z6	X	-	-	9.744.768	W P.T.O. IN	special
R	120 249 360 781	1100	Turbine	3 L 50 ø 35	11:1	1 1" 3/8 Z6	X	7	-	9.744.766	W P.T.O. IN	special
	240 498 720 756 1562	1100	Turbine (low flow)	3 L 50 ø 35	11:1	1 1" 3/8 Z6	X	-	V	9.744.761	W P.T.O. IN	special

D-742A

Code **742**

(3.04)

[kg] 55.4 | [l] -

Per configurazioni non a catalogo contattare Servizio Tecnico-Commerciale
For non-catalog configurations contact Technical-Commercial Service

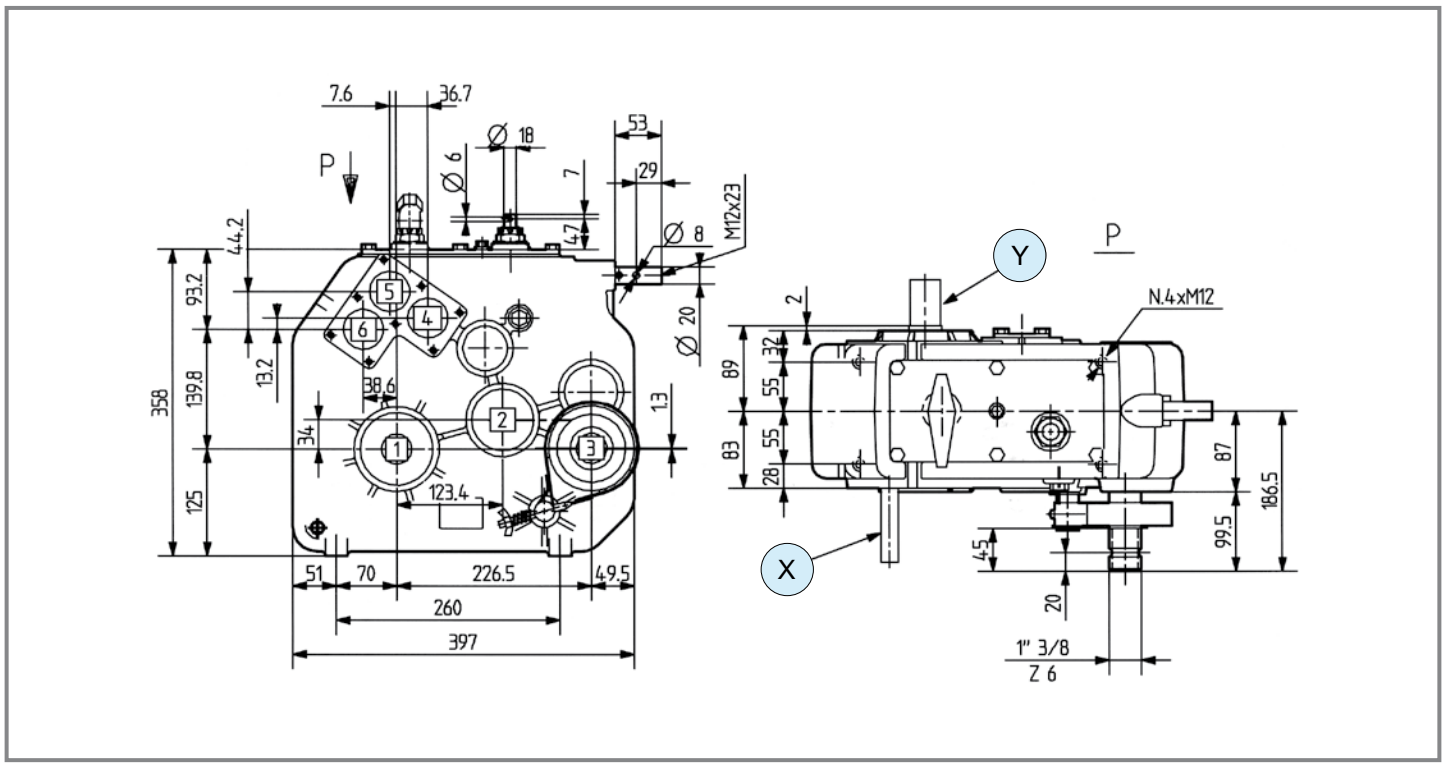

	i	M_2 [Nm]	Shaft type X	Shaft type Y	(i) P.T.O.	P.T.O.	Input	Features	Pin (on/off)	Code	Mounting	
R	116 241 348 756	2100	48 L 94 ø 15	4 L 50 ø 40	10.7:1	1 1" 3/8 Z6	X	-	-	9.742.061	W P.T.O.	special
R	116 241 348 756	2100	46 L 80 ø 19	4 L 50 ø 40	10.7:1	1 1" 3/8 Z6	X	-	V	9.742.002	W P.T.O.	special
	115 250	2100	46 L 80 ø 19	4 L 50 ø 40	10.7:1	1 1" 3/8 Z6	X	-	V	9.742.074	W P.T.O. antiorario ccw	special

DTU-742A

Code **742**

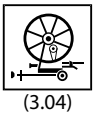

(3.04)

[kg]	70	[l]	-

Per configurazioni non a catalogo contattare Servizio Tecnico-Commerciale
For non-catalog configurations contact Technical-Commercial Service

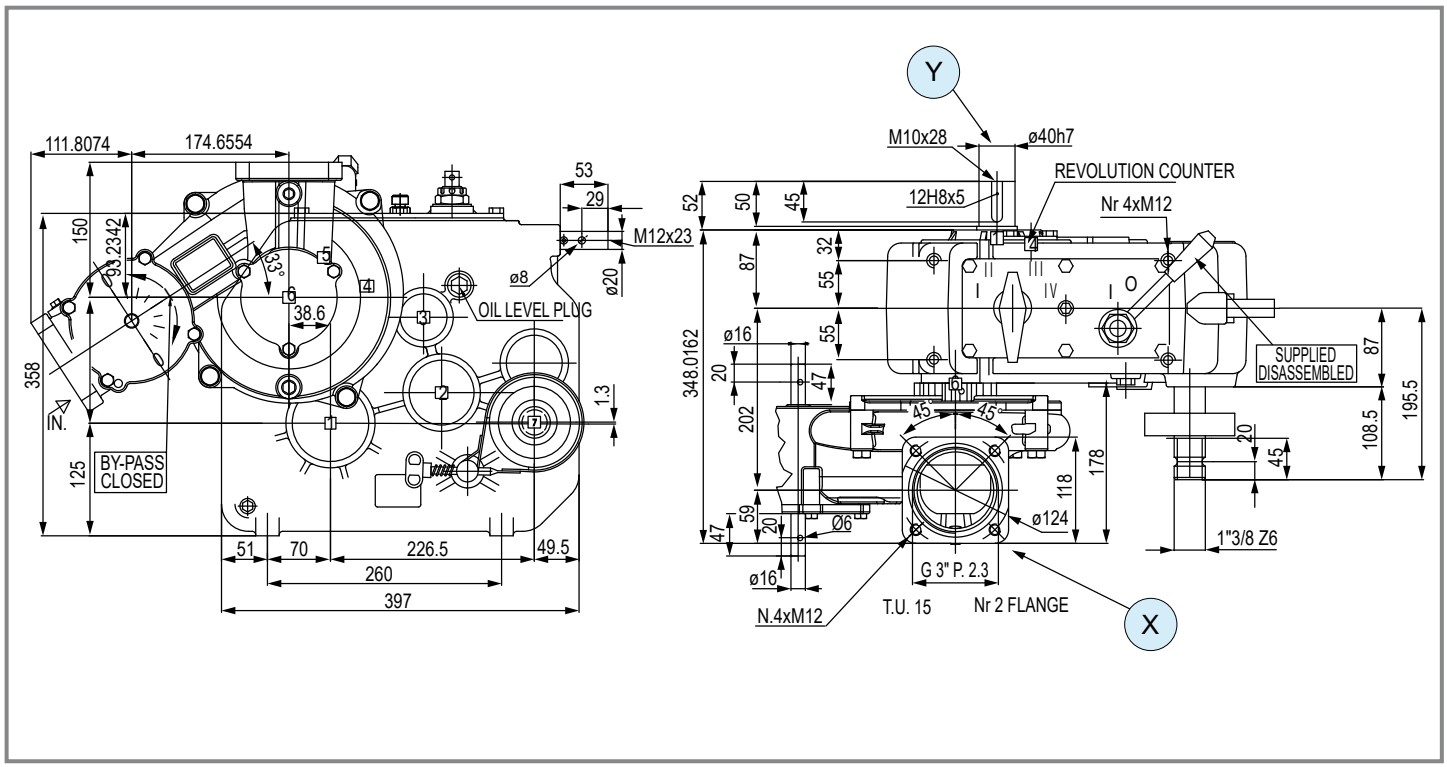

	7 - Attuatore elettrico / *Electric actuator*											
	i	M_2 [Nm]	Shaft type X	Shaft type Y	(i) P.T.O.	P.T.O.	Input	Features	Pin (on/off)	Code	Mounting	
R	116 241 348 756	2100	Turbine	4 L 50 ø 40	10.7:1	1 1" 3/8 Z6	X	-	-	9.742.765	W P.T.O. in	special
	232 482 696 151	2100	Turbine (low flow)	4 L 50 ø 40	10.7:1	1 1" 3/8 Z6	X	7	V	9.742.761	W P.T.O. in	special

Per configurazioni non a catalogo contattare Servizio Tecnico-Commerciale
For non-catalog configurations contact Technical-Commercial Service

		i		P_{1max} [kW]	Nr. of disk	Larghezza di taglio *Cutting width*	p.
Barre falcianti *Cutting bar*	FR-507	M	-	41.00	5 6 7 8	2.10 2.40 2.85 3.18	184
		-	-				
		R	2.73				
	FR-522	M	-	46.30	5 6 7 8 9	2.09 2.42 2.85 3.17 3.20	185
		-	1.00				
		R	-				
	FR-567	M	-	46.30	6 7 8 9	2.5 2.9 3.3 3.7	186
		-	1.00				
		R	-				

		i		$P_{1 - max}$ [kW]	$M_{2 max}$ [Nm]	Tipologia alberi disponibili *Available type of shafts*	p.
Scatole ad ingranaggi per barre falcianti *Gearboxes for cutting bar*	LF-142A	M	2.06	33.0	137	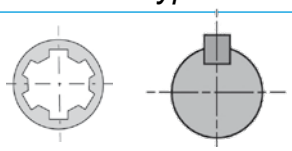	187
		-	-				
		R	-				
	T-304A	M		50.7	359	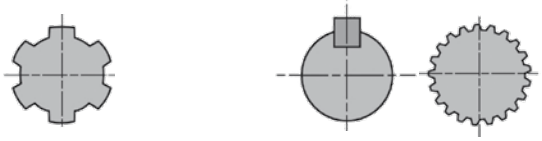	188
		-	-				
		R	-				
	T-312HD	M	3.17÷3.91	50.0	146	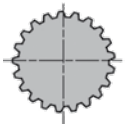	189
		-	-				
		R	-				
	TV-312H	M	3.00	62.5	261	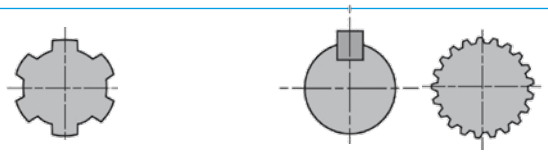	190
		-	-				
		R	-				
	T-278D	M	1.35	55.0	699	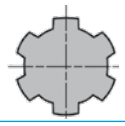	191
		-	-				
		R	-				
	NV-676A	M	1.35÷5.29	60.3	-	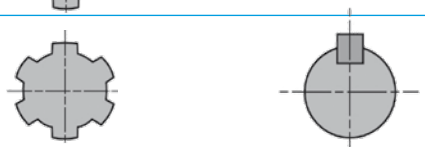	192
		-	-				
		R	-				
	T-279D	M	1.35	62.5	794		193
		-	-				
		R	1.35				

FR-507

Code **507**

(4.01)

Per configurazioni non a catalogo contattare Servizio Tecnico-Commerciale
For non-catalog configurations contact Technical-Commercial Service

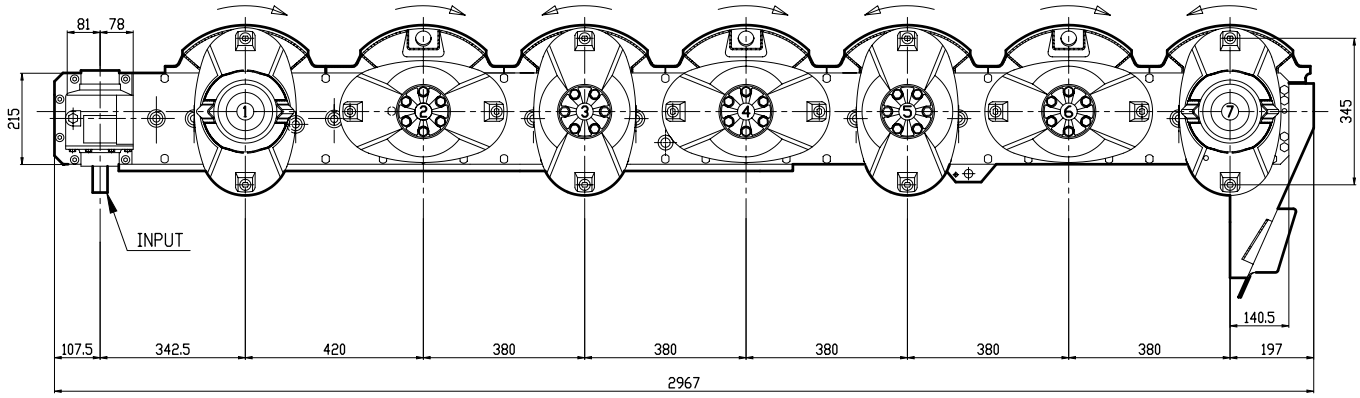

	9 - Dispositivo di sicurezza / Safety device											
	i	N_1 [rpm]	P_1 [kW]	Nr. of disk	Lunghezza di taglio Cutting width [m]	Gearbox [l]	Cutter bar [l]	[kg]	Options	Code light	Code heavy	
R	**2.73**	1080	25.7	5	2.10	0.7	2.1	145	9	9.505.201	9.505.211	std
R	**2.73**	1080	30.1	6	2.40	0.7	2.7	167	9	9.506.201	9.506.213	std
R	**2.73**	1080	36.0	7	2.85	0.7	3.2	170	9	9.507.201	9.507.213	std
R	**2.73**	1080	41.0	8	3.18	0.7	3.5	224	9	9.508.201	9.508.209	std

FR-522

Code **522**

(4.01)

Per configurazioni non a catalogo contattare Servizio Tecnico-Commerciale
For non-catalog configurations contact Technical-Commercial Service

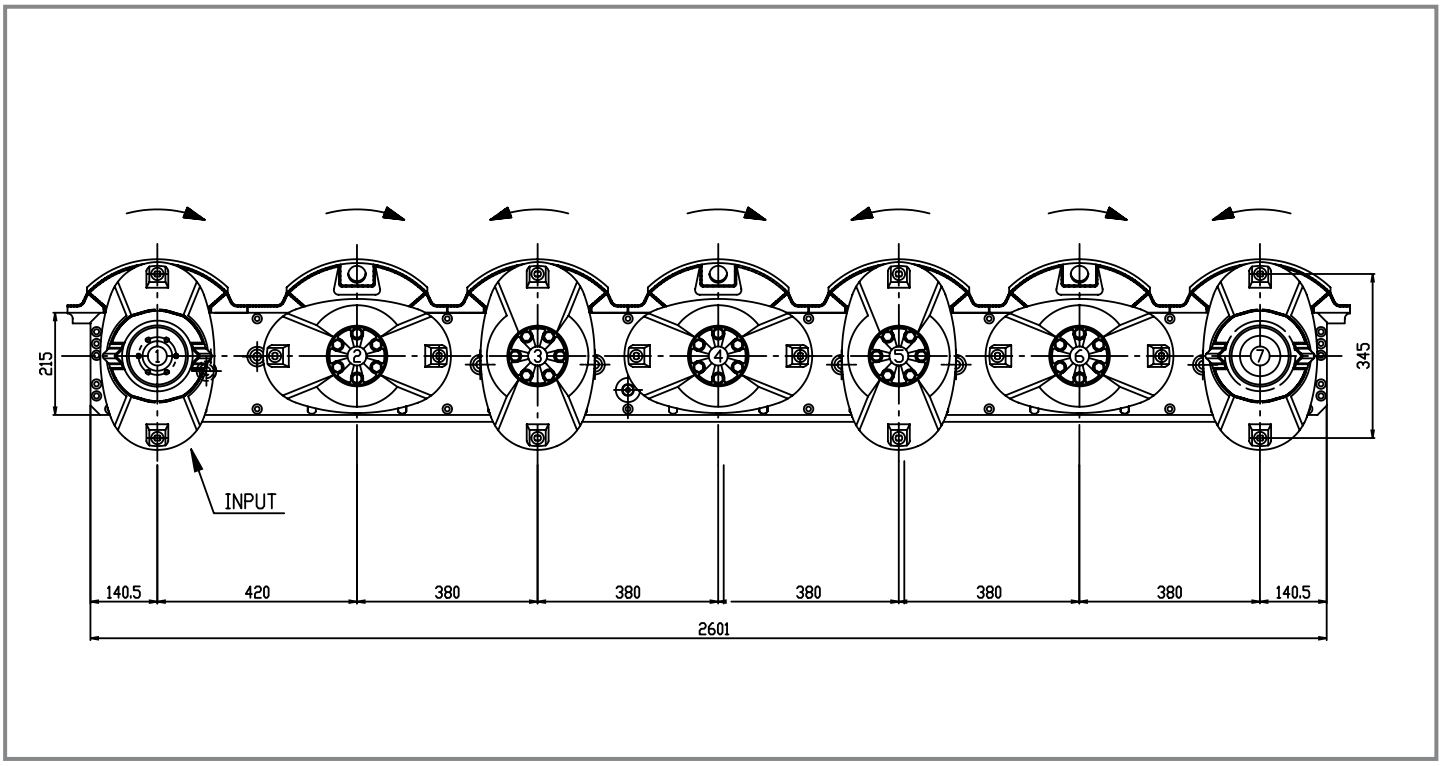

	9 - Dispositivo di sicurezza / Safety device											
	i	N_1 [rpm]	P_1 [kW]	Nr. of disk	Lunghezza di taglio Cutting width [m]	Gearbox [l]	Cutter bar [l]	[kg]	Options	Code light	Code heavy	
-	**1.00**	3000	25.7	5	2.10	-	1.5	116	9	9.520.100	-	std
	1.00	3000	30.9	6	2.60	-	1.75	138	9	9.521.100	-	std
	1.00	3000	36.0	7	2.85	-	2.30	165	9	9.522.101	9.522.108	std
	1.00	3000	41.2	8	3.20	-	2.75	198	9	9.523.100	9.523.113	std
	1.00	3000	46.3	9	3.20	-	3.10	-	9	-	-	std

FR-567

Code **567**

(4.01)

Per configurazioni non a catalogo contattare Servizio Tecnico-Commerciale
For non-catalog configurations contact Technical-Commercial Service

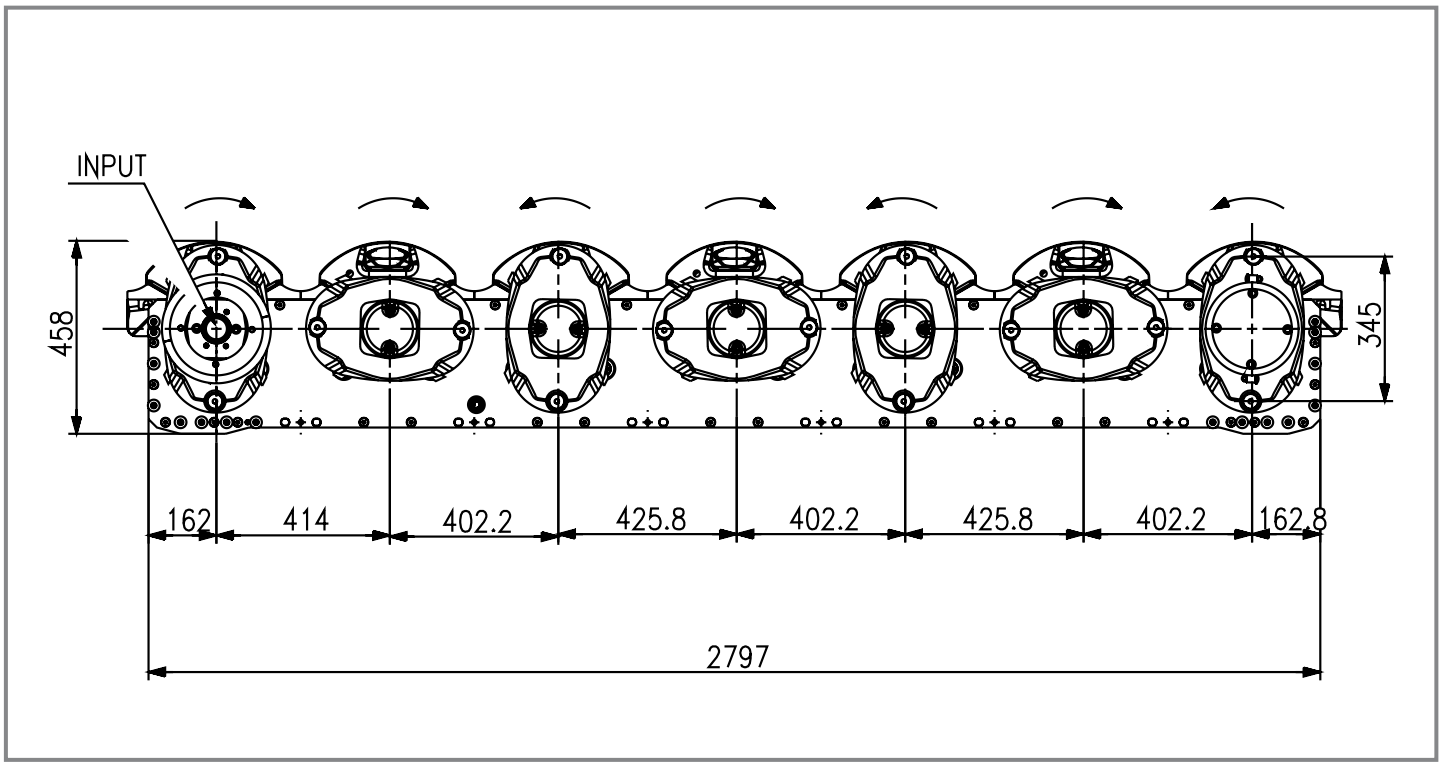

	i	N_1 [rpm]	P_1 [kW]	Nr. of disk	Lunghezza di taglio Cutting width [m]	Gearbox [l]	Cutter bar [l]	[kg]	Options	Code light	Code heavy	
	1.00	3000	31.0	6	2.50	-	1.50	94		-	-	std
-	**1.00**	3000	36.0	7	3.00	-	1.50	116		9.567.000	-	std
	1.00	3000	41.2	8	3.30	-	1.80	138		-	-	std
	1.00	3000	46.3	9	3.70	-	2.30	165		-	-	std

LF-142A

Code **142**

(4.01)

[kg] 22.5 | [l] -

Per configurazioni non a catalogo contattare Servizio Tecnico-Commerciale
For non-catalog configurations contact Technical-Commercial Service

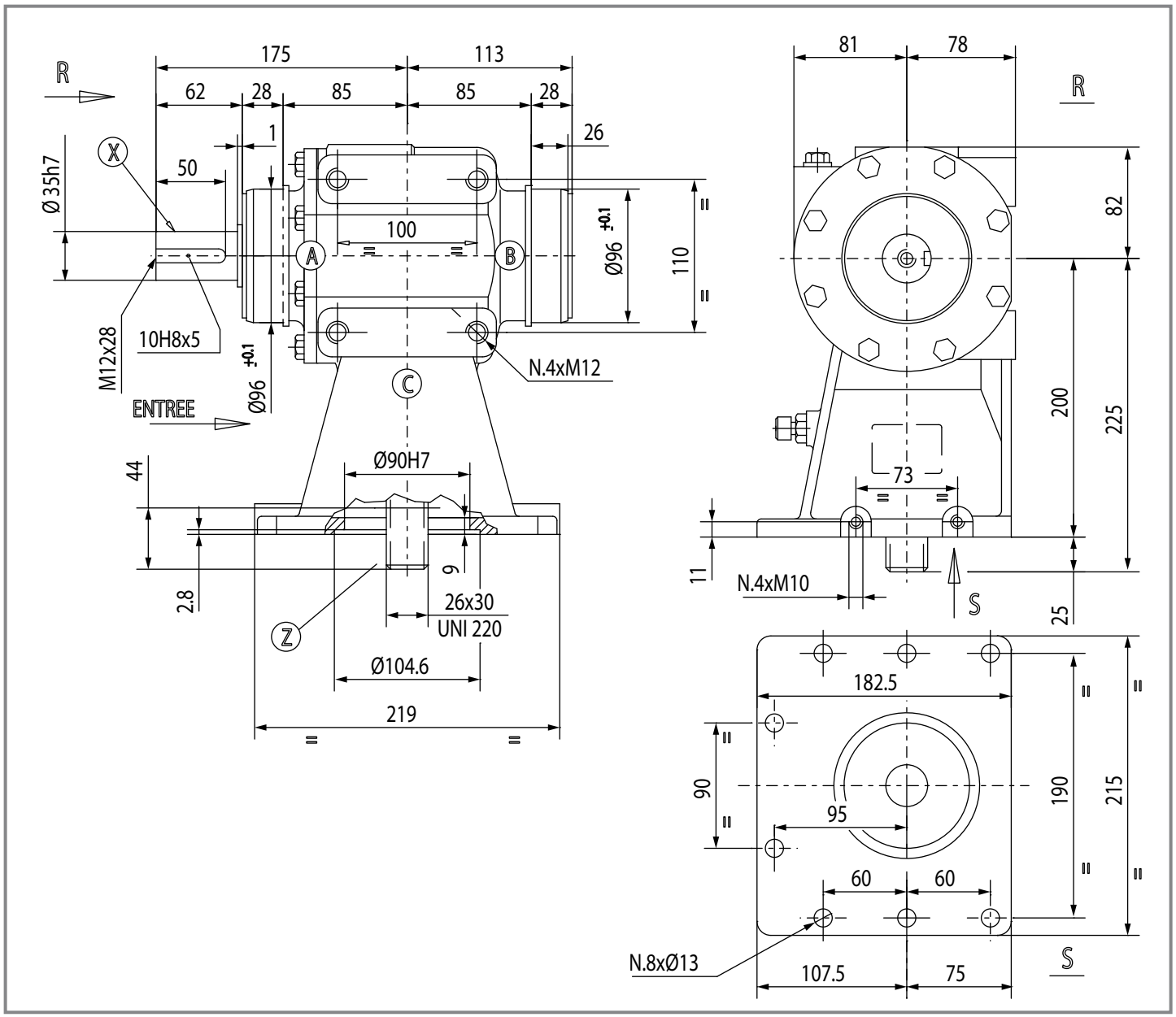

	i	N_1 [rpm]	P_1 [kW]	M_2 [Nm]	Shaft type X	Shaft type Y	Shaft type Z	Input	Features	Code	Mounting	
M	**2.06**	1080	33.0	137	3 L 62 ø 35	-	68 26x30 UNI220	X	-	9.142.001	23 24	std

T-304A

Code **304**

(4.01)

[kg]	19	[l]	1.1

Per configurazioni non a catalogo contattare Servizio Tecnico-Commerciale
For non-catalog configurations contact Technical-Commercial Service

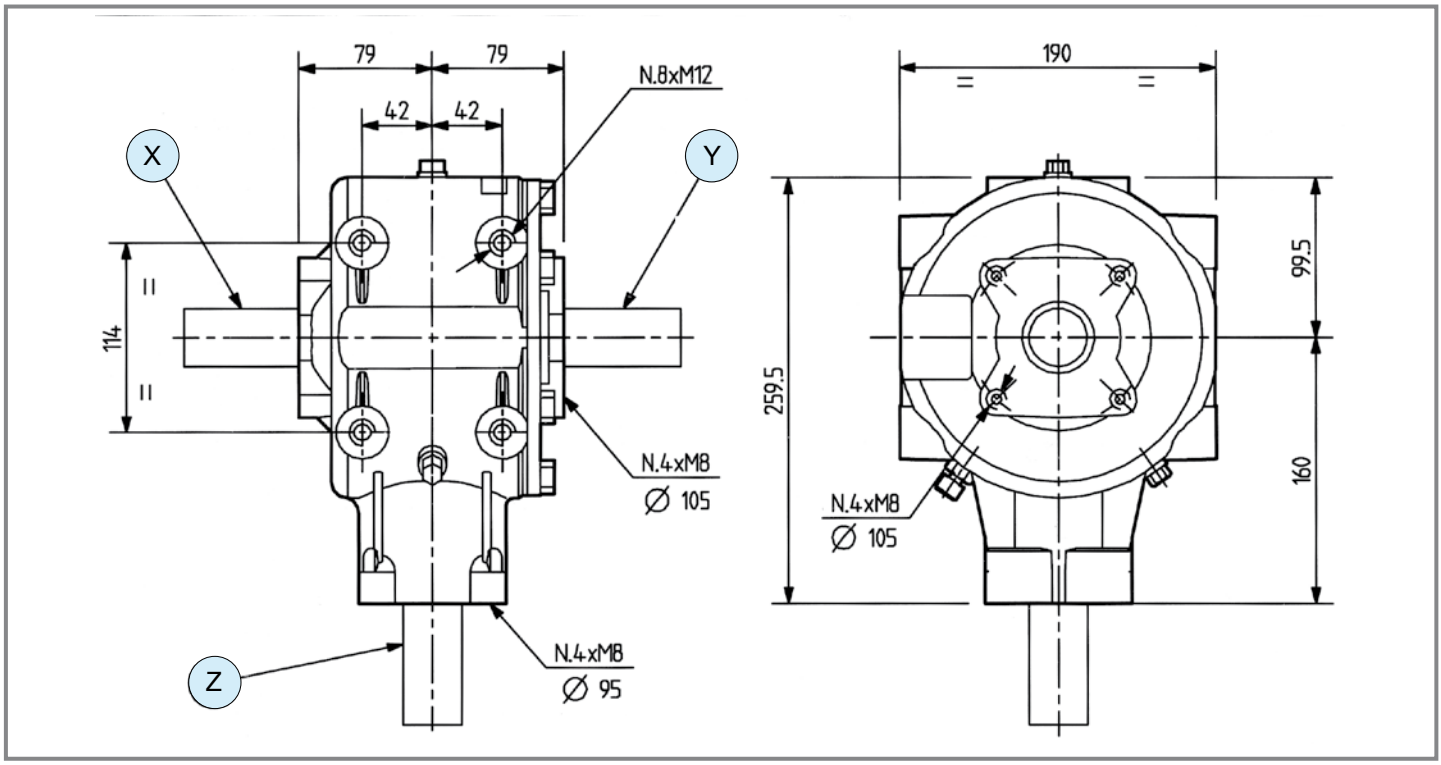

	i	N_1 [rpm]	P_1 [kW]	M_2 [Nm]	Shaft type X	Shaft type Y	Shaft type Z	Input	Features	Code	Mounting	
M	**1.93**	540	40.4	359	1 — 1" 3/8 Z6	-	1 — 1" 3/8 Z6	X	-	9.304.236	23 24	std
M	**3.00**	1000	50.7	157	3 — L 50 ø 35; 1 — 1" 3/8 Z6	-	2 — 1"3/8 Z21	X	-	9.304.237	21 22	std
	3.00	1000	50.7	157	1 — 1" 3/8 Z6	4 — L 80 ø 40	1 — 1" 3/8 Z6	X	-	9.304.398	25 26	std

comer industries

T-312HD

Code **312**

(4.01)

[kg]	27	[l]	1.5

Per configurazioni non a catalogo contattare Servizio Tecnico-Commerciale
For non-catalog configurations contact Technical-Commercial Service

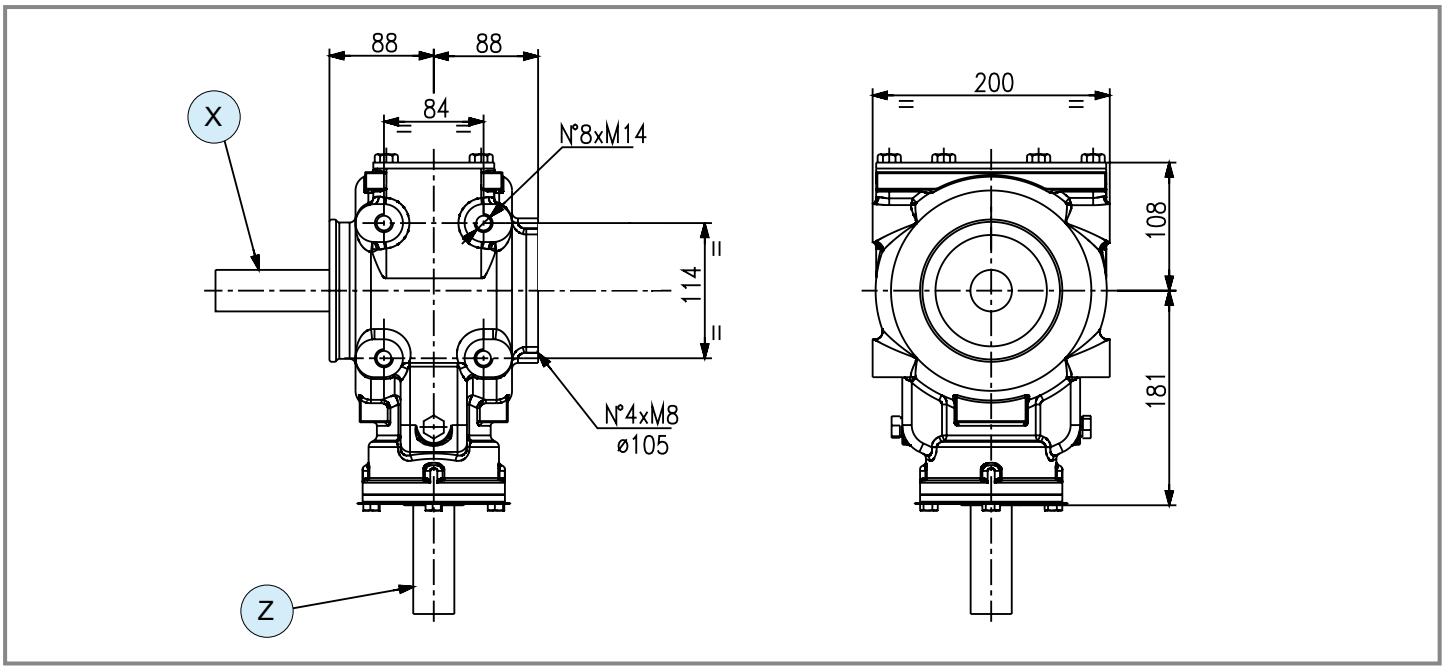

	5 - Rinforzato / Reinforced											
	i	N_1 [rpm]	P_1 [kW]	M_2 [Nm]	Shaft type X	Shaft type Y	Shaft type Z	Input	Features	Code	Mounting	
M	3.91	1000	50.0	118	2 1"3/8 Z21	-	2 1"3/8 Z21	X	5	-	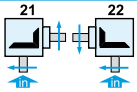	std
	3.17	1000	50.0	146	2 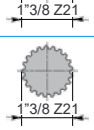 1"3/8 Z21	-	2 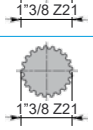 1"3/8 Z21	X	5	-	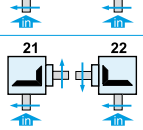	std

TV-312H

Code **312**

(4.01)

[kg]	26	[l]	-

Per configurazioni non a catalogo contattare Servizio Tecnico-Commerciale
For non-catalog configurations contact Technical-Commercial Service

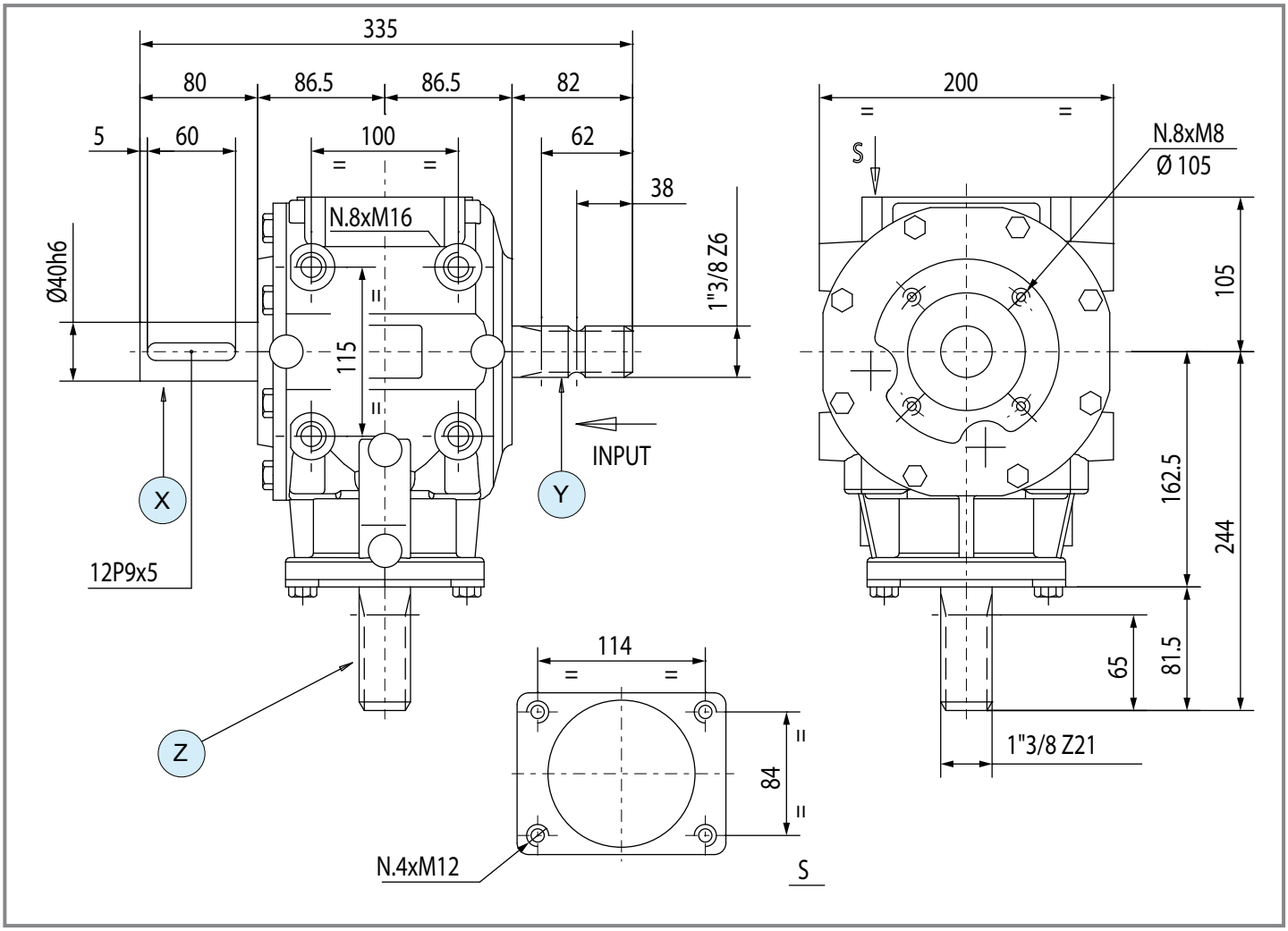

	i	N_1 [rpm]	P_1 [kW]	M_2 [Nm]	Shaft type X	Shaft type Y	Shaft type Z	Input	Features	Code	Mounting	
	3.00	540	45.6	261	1 1" 3/8 Z6; 4 L 105.5 ø 40	-	2 1"3/8 Z21	X	-	9.312.624	21 22	std
M	**3.00**	1000	62.5	193	4 L 80 ø 40	1 1" 3/8 Z6	2 1"3/8 Z21	Y	-	9.312.705	27 28	std
	3.92	730	55.0	178	1 1" 3/8 Z6; 3 L 142.5 ø 35	-	2 1"3/8 Z21	X	-	9.312.635	23 24	std

comer industries

T-278D

Code **278**

(4.01)

kg [kg]	55	OIL [l]	1.2+1

Per configurazioni non a catalogo contattare Servizio Tecnico-Commerciale
For non-catalog configurations contact Technical-Commercial Service

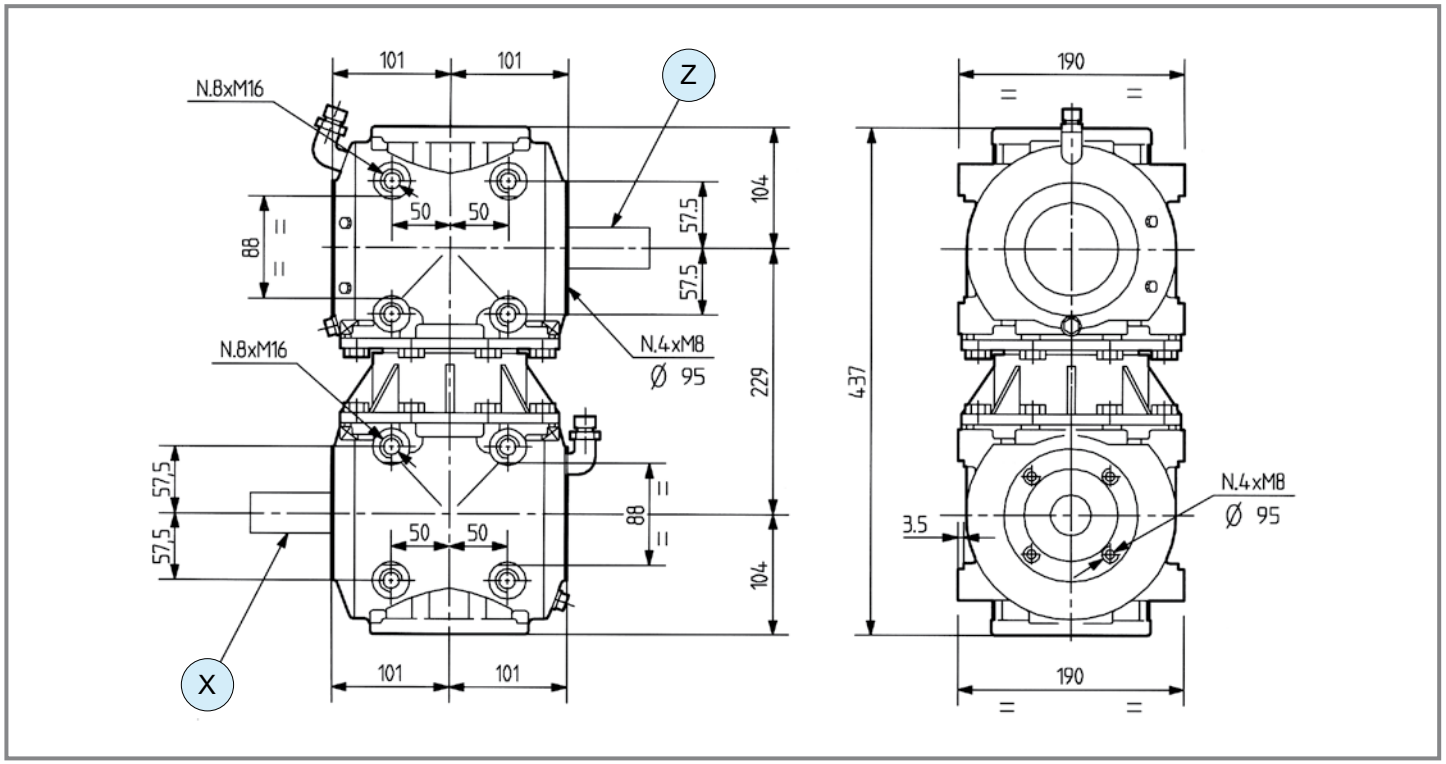

	i	N_1 [rpm]	P_1 [kW]	M_2 [Nm]	Shaft type X	Shaft type Y	Shaft type Z	Input	Features	Code	Mounting	
M	**1.35**	540	44.1	560	1 1" 3/8 Z6	-	1 1" 3/8 Z6	X	-	9.278.215	227 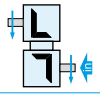	std
	1.35	540	55.0	699	1 1" 3/8 Z6	-	1 1" 3/8 Z6	X	-	9.278.232	227	std

NV-676A

Code **676**

(4.01)

[kg] [l]

Per configurazioni non a catalogo contattare Servizio Tecnico-Commerciale
For non-catalog configurations contact Technical-Commercial Service

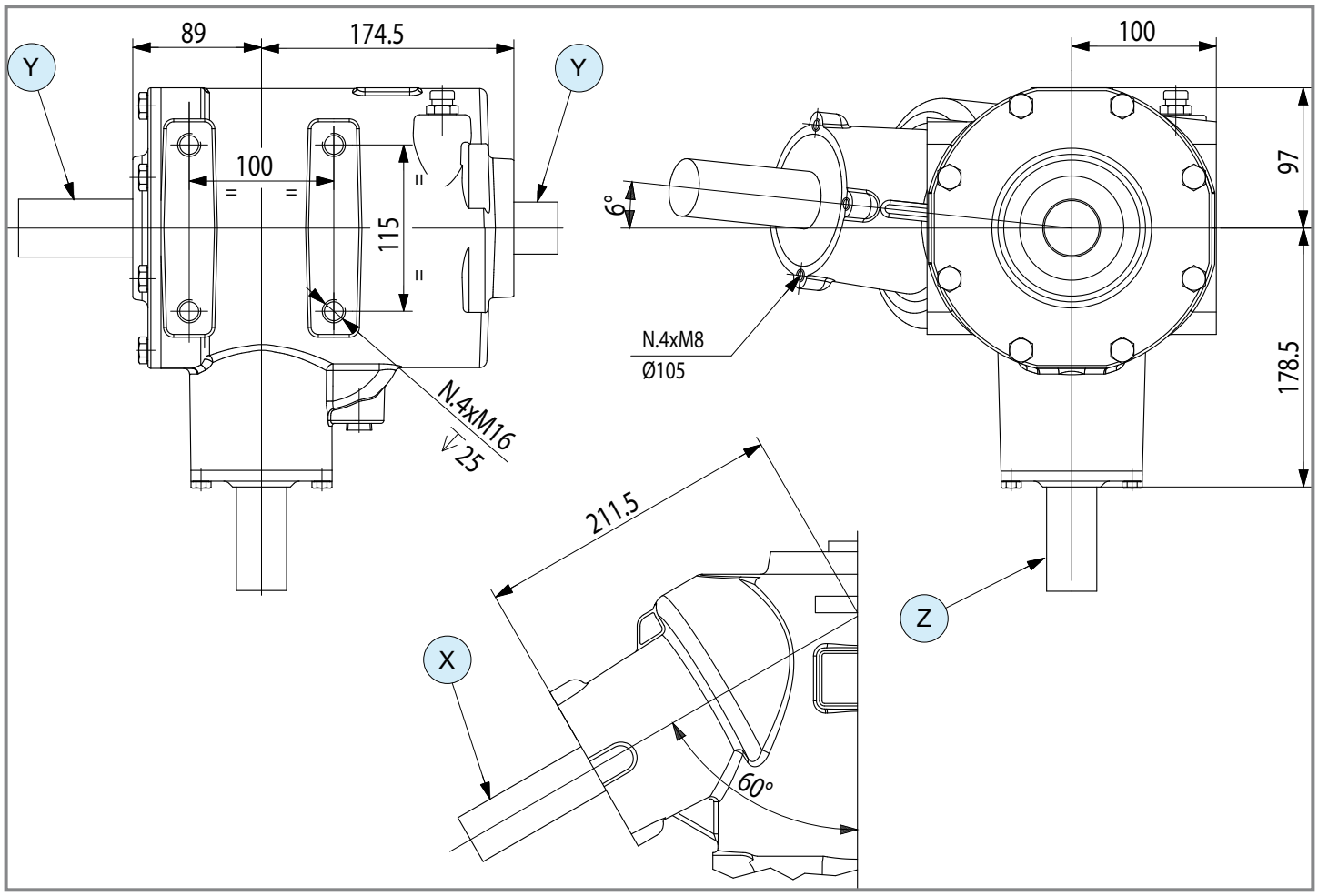

	i	N_1 [rpm]	P_1 [kW]	M_2 [Nm]	Shaft type X	Shaft type Y	Shaft type Z	Input	Features	Code	Mounting	
	XY 1.35 XZ 4.05	540	60.3	-	1 1" 3/8 Z6	3 L 77 ø 35	1 1" 3/8 Z6	X	-	9.676.304	-	std
M	**XY 1.35 XZ 4.05**	540	60.3	-	1 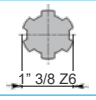 1" 3/8 Z6	4 L 79 ø 40	1 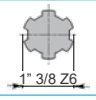 1" 3/8 Z6	X	-	9.676.008	-	std
	XY 1.35 XZ 5.29	540	41.2	-	1 1" 3/8 Z6	83 L 174.5 ø38	1 1" 3/8 Z6	X	-	9.676.303	-	std

T-279D

Code **279**

4.01

[kg]	64	[l]	1.9+1.7

Per configurazioni non a catalogo contattare Servizio Tecnico-Commerciale
For non-catalog configurations contact Technical-Commercial Service

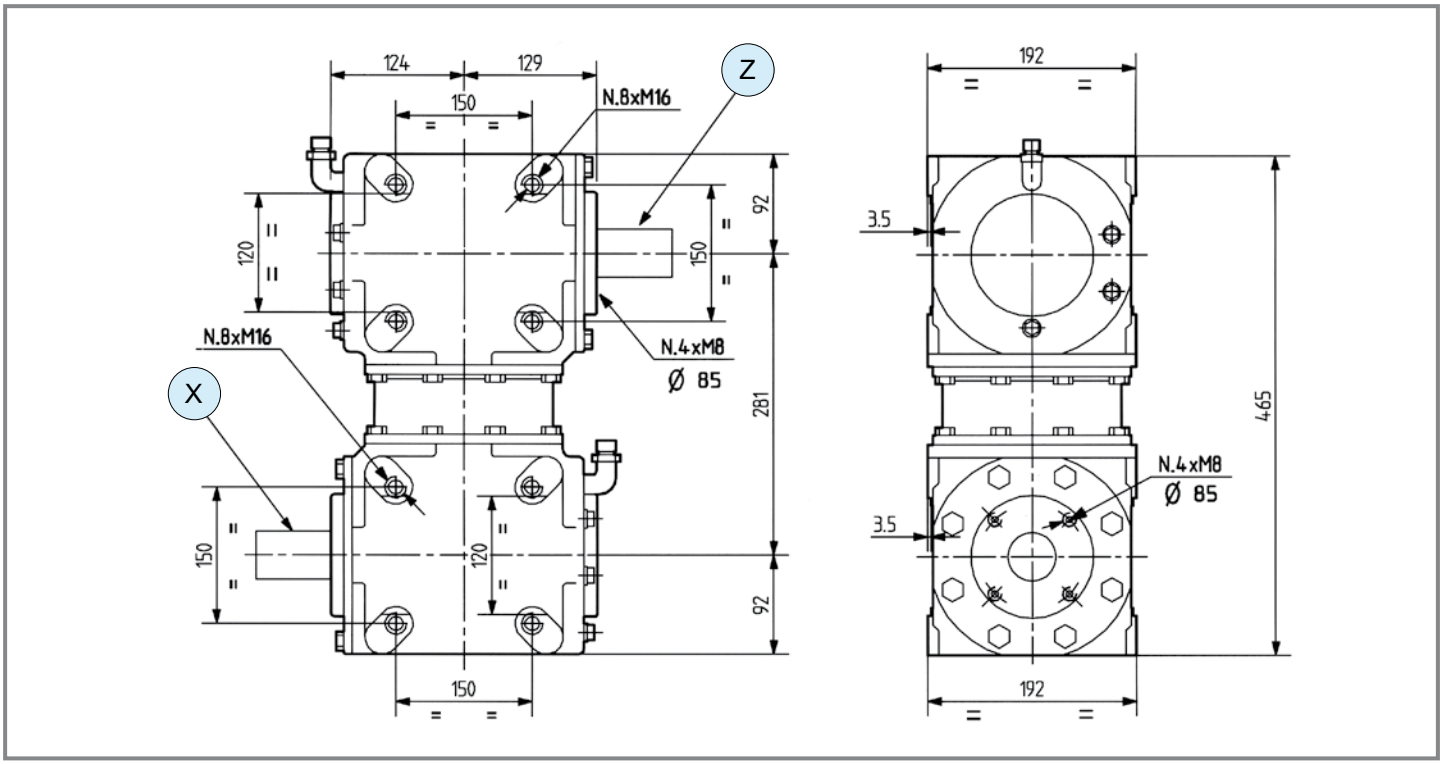

	i	N_1 [rpm]	P_1 [kW]	M_2 [Nm]	Shaft type X	Shaft type Y	Shaft type Z	Input	Features	Code	Mounting	
M	**1.82**	540	62.5	589	1 1" 3/8 Z6	-	1 1" 3/8 Z6	X	-	9.279.331	232 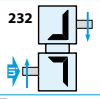	std
	1.35	540	62.5	794	2 1"3/8 Z21	-	2 1"3/8 Z21	X	-	9.279.305	227	std
R	**1.35**	1000	88.2	1103	2 1"3/8 Z21	-	2 1"3/8 Z21	X	-	9.279.303	227	std

Giroandanatori e Spandifieno rotativi
Rotary Rakes and Rotary Tedders

(4.02) (4.05)

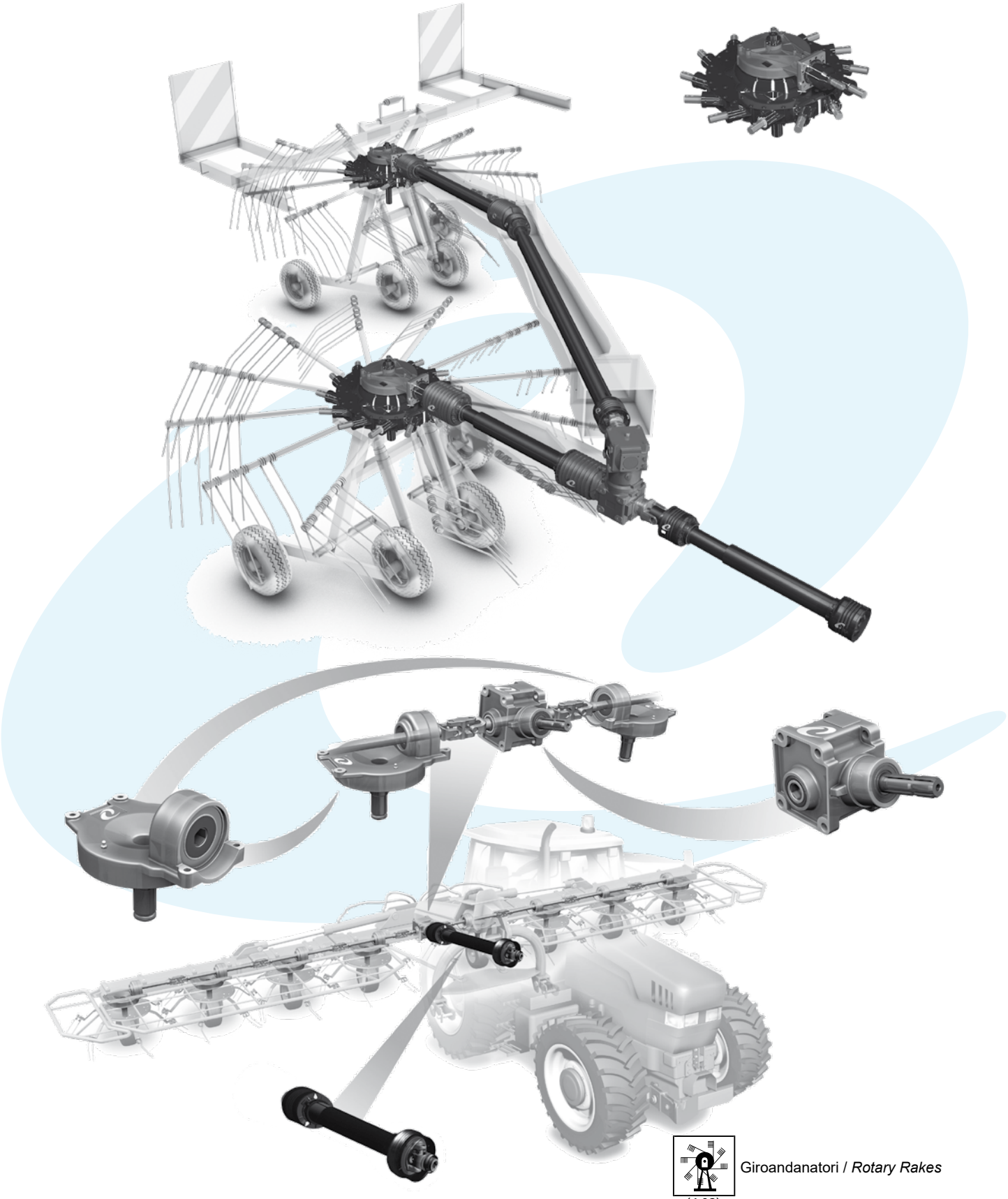

(4.02) Giroandanatori / *Rotary Rakes*

(4.05) Spandifieno rotativi / *Rotary Tedders*

Per configurazioni non a catalogo contattare Servizio Tecnico-Commerciale
For non-catalog configurations contact Technical-Commercial Service

	i	$M_{2\text{ - max}}$ [Nm]	Tipologia alberi disponibili *Available type of shafts*	p.
K-789A	R 7.5	190		196
K-791A	R 7.2	190		197
K-792A	R 8.2÷9.7	210÷230		198
K-794A	R 8.1÷8.2	210		199
K-795T	R 9.2÷9.7	200÷210		200
K-797T	R 9.2	210		201
K-799A	R 8.1	210		202
Y-890A	M 1.25	343		203
	- 1.00	429		
	R 1.25	536		
TB-318J	R 1.77	607		204
TB-319J	R 2	226		205
TB-320A	R 1.77	1002		206
TB-323J	R 1.54÷1.69	406		207
LB-324J	R 1.54÷2.0	370		208

K-789A

Code **789**

(4.02)

[kg]	67	[l]	2.8

Per configurazioni non a catalogo contattare Servizio Tecnico-Commerciale
For non-catalog configurations contact Technical-Commercial Service

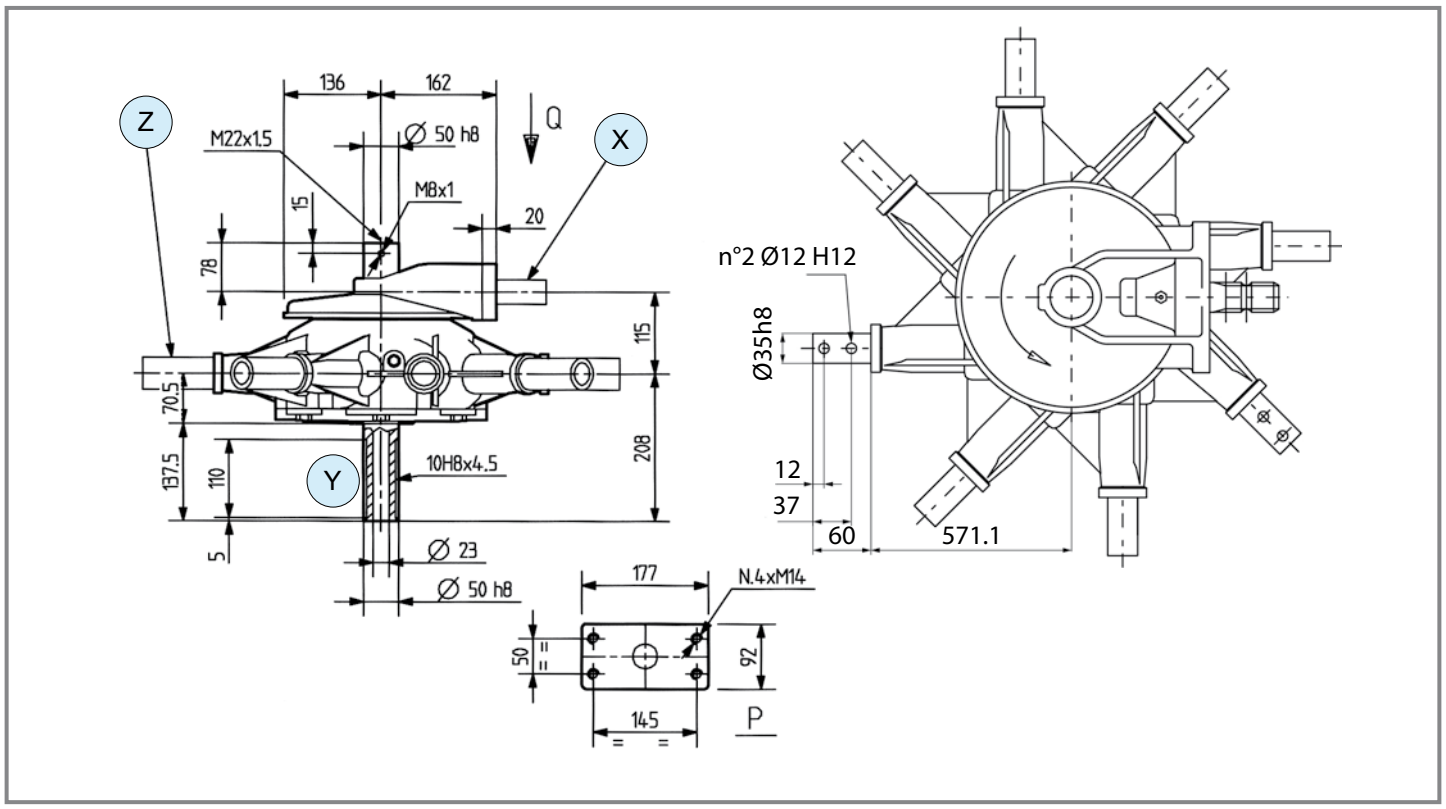

	i	N_1 [rpm]	M_2 [Nm]	nr. Arms	ø Rotor [m]	Shaft type X	Shaft type Y	Shaft type Z	Input	Code	Mounting	Direction	Note	
R	**7.20**	540	190	8	2.6	1 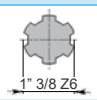 1" 3/8 Z6	23 L 137.5 ø 50	24 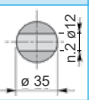 L 60 ø 35 n.2 ø12	X	9.789.405	201 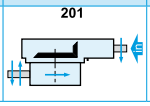	SX	single rotor	std

comer industries

K-791A

Code **791**

(4.02)

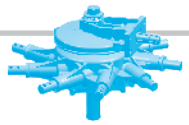

[kg]	75	[l]	3.1

Per configurazioni non a catalogo contattare Servizio Tecnico-Commerciale
For non-catalog configurations contact Technical-Commercial Service

Disponibile versione Dx e Sx.
Available Lh and Rh version.

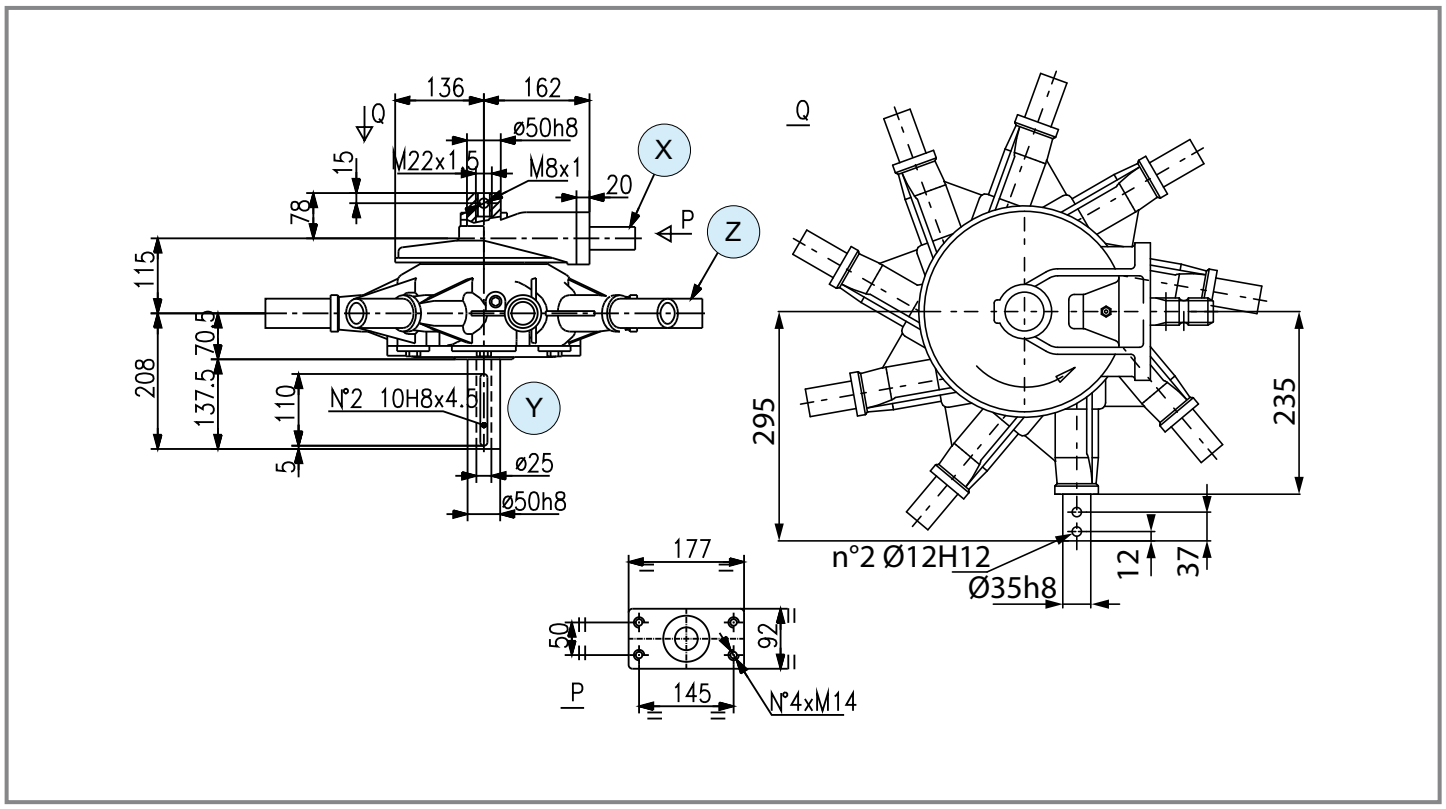

	i	N_1 [rpm]	M_2 [Nm]	nr. Arms	ø Rotor [m]	Shaft type X	Shaft type Y	Shaft type Z	Input	Code	Mounting	Direction	Note	
R	**7.20**	540	190	9	2.8	1 1" 3/8 Z6	23 L 137.5 ø 50	24 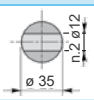 ø 35 n.2 ø12	X	9.791.406	201 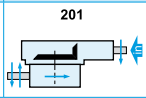	SX	single rotor	std
R	**7.20**	540	190	9	2.8	1 1" 3/8 Z6	23 L 177.5 ø 50	24 ø 35 n.2 ø12	X	9.791.408	201 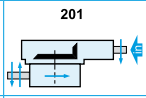	SX	double rotor	std
R	**7.20**	540	190	9	2.8	1 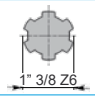 1" 3/8 Z6	23 L 177.5 ø 50	24 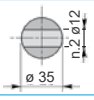 ø 35 n.2 ø12	X	9.791.409	201 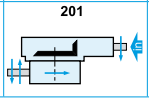	DX	double rotor	std

K-792A

Code **792**

(4.02)

Per configurazioni non a catalogo contattare Servizio Tecnico-Commerciale
For non-catalog configurations contact Technical-Commercial Service

[kg] 100 | [l] 5.7

Disponibile versione Dx e Sx.
Available Lh and Rh version.

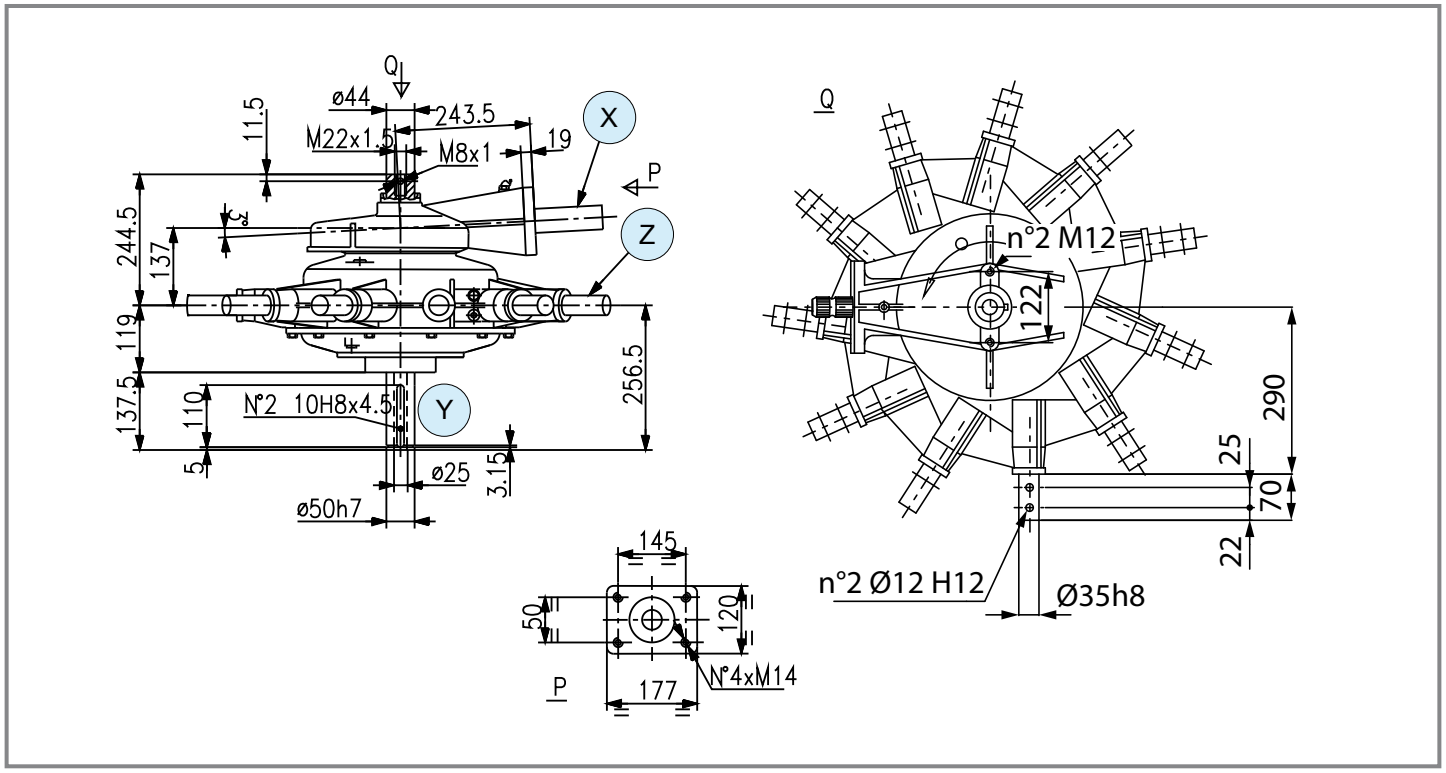

	i	N_1 [rpm]	M_2 [Nm]	nr. Arms	ø Rotor [m]	Shaft type X	Shaft type Y	Shaft type Z	Input	Code	Mounting	Direction	Note	
R	**8.20**	540	210	11	3.2	1 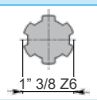 1" 3/8 Z6	23 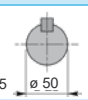 L 137.5 ø 50	24 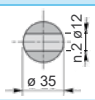 ø 35 n.2 ø12	X	9.792.411	201 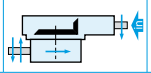	SX	double rotor	std
	8.20	540	210	11	3.2	1 1" 3/8 Z6	23 L 137.5 ø 50	24 ø 35 n.2 ø12	X	9.792.410	201 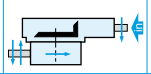	DX	double rotor	std
	8.20	540	210	11	3.2	1 1" 3/8 Z6	23 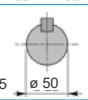 L 137.5 ø 50	24 ø 35 n.2 ø12	X	9.792.401	201 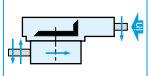	SX	single rotor	std
	9.70	540	230	11	3.2	1 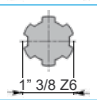 1" 3/8 Z6	23 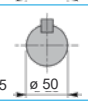 L 137.5 ø 50	24 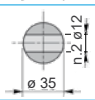 ø 35 n.2 ø12	X	9.792.317	201 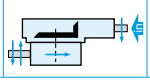	SX	single rotor	std

comer industries

K-794A

Code **794**

(4.02)

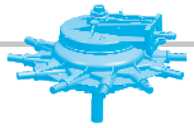

[kg]	114	[l]	-

Per configurazioni non a catalogo contattare Servizio Tecnico-Commerciale
For non-catalog configurations contact Technical-Commercial Service

Disponibile versione Dx e Sx.
Available Lh and Rh version.

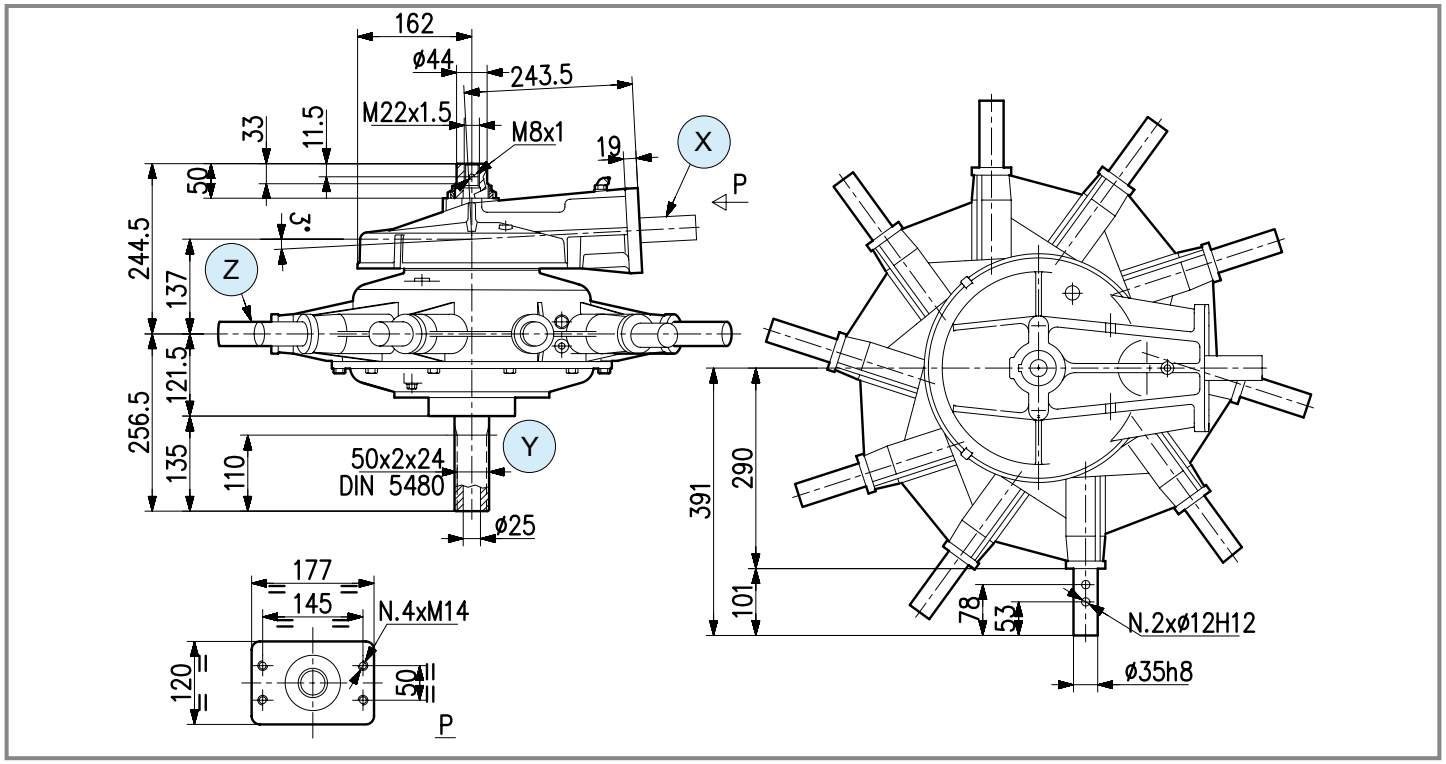

	i	N_1 [rpm]	M_2 [Nm]	nr. Arms	ø Rotor [m]	Shaft type X	Shaft type Y	Shaft type Z	Input	Code	Mounting	Direction	Note	
R	**8.20**	540	210	10	3.0	1 — 1" 3/8 Z6	26 — 50x2x24 DIN5480	24 — ø 35, n.1 ø12	X	9.794.005	201	SX	single rotor	std
R	**8.10**	540	210	10	3.0	1 — 1" 3/8 Z6	26 — 50x2x24 DIN5480	24 — ø 35, n.1 ø12	X	9.794.006	201	SX	double rotor	std
	8.10	540	210	10	3.0	1 — 1" 3/8 Z6	26 — 50x2x24 DIN5480	24 — ø 35, n.1 ø12	X	9.794.007	201	DX	double rotor	std

K-795T

Code **795**

(4.02)

[kg] 186 | [l] -

Per configurazioni non a catalogo contattare Servizio Tecnico-Commerciale
For non-catalog configurations contact Technical-Commercial Service

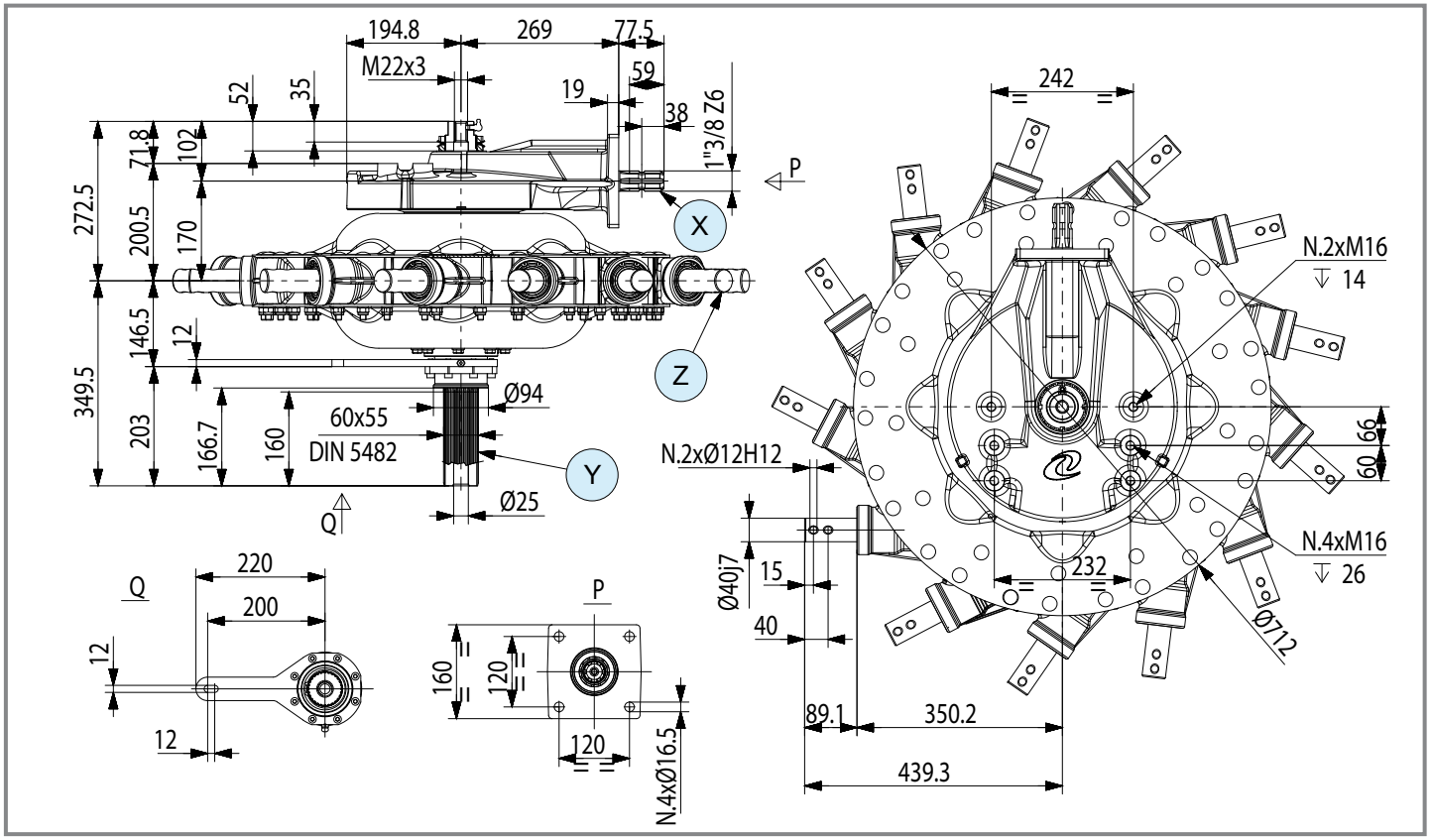

	i	N_1 [rpm]	M_2 [Nm]	nr. Arms	ø Rotor [m]	Shaft type X	Shaft type Y	Shaft type Z	Input	Code	Mounting	Direction	Note	
R	**9.70**	540	200	13	4.2	1 — 1" 3/8 Z6	42 — 60x55 DIN5482	28 — ø 40, n.2 ø12	X	9.795.102	201	SX	single rotor	std
R	**9.20**	540	210	13	4.2	1 — 1" 3/8 Z6	42 — 60x55 DIN5482	28 — ø 40, n.2 ø12	X	9.795.112	201	SX	double rotor	std
R	**9.20**	540	210	13	4.2	1 — 1" 3/8 Z6	42 — 60x55 DIN5482	28 — ø 40, n.2 ø12	X	9.795.113	201	DX	double rotor	std

comer industries

K-797T

Code **797**

(4.02)

[kg] 186 | [l]

Per configurazioni non a catalogo contattare Servizio Tecnico-Commerciale
For non-catalog configurations contact Technical-Commercial Service

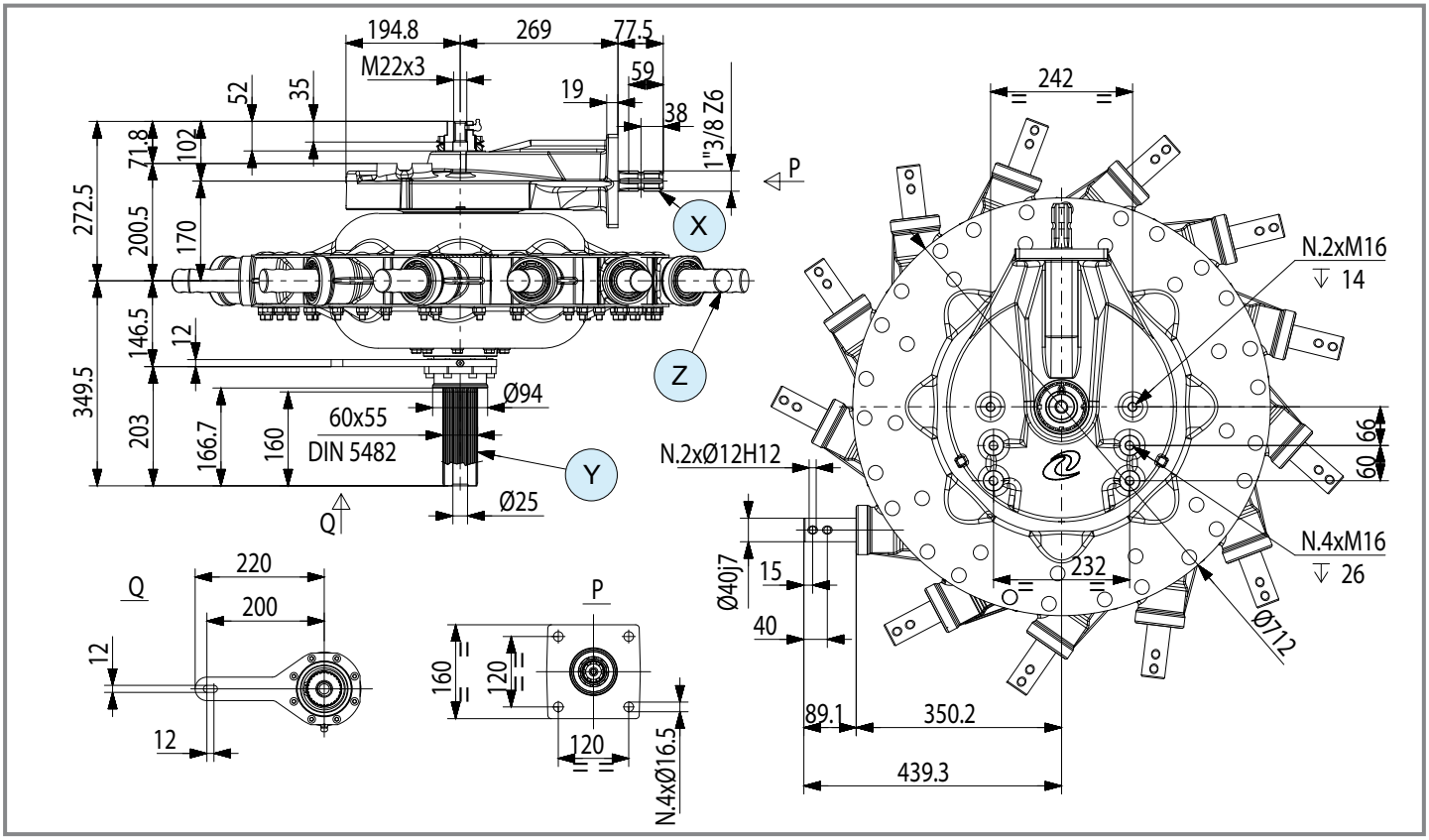

	i	N_1 [rpm]	M_2 [Nm]	nr. Arms	ø Rotor [m]	Shaft type X	Shaft type Y	Shaft type Z	Input	Code	Mounting	Direction	Note	
	9.20	540	210	11	3.2	1	42 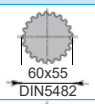	28	X	9.797.100	201 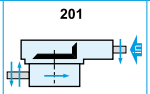	SX	double rotor	std
	9.20	540	210	11	3.2	1 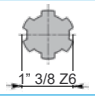	42 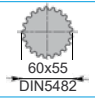	28 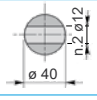	X	9.797.101	201 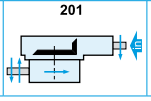	DX	double rotor	std

K-799A

Code **799**

(4.02)

[kg]	130	[l]	-

Per configurazioni non a catalogo contattare Servizio Tecnico-Commerciale
For non-catalog configurations contact Technical-Commercial Service

Disponibile versione Dx e Sx.
Available Lh and Rh version.

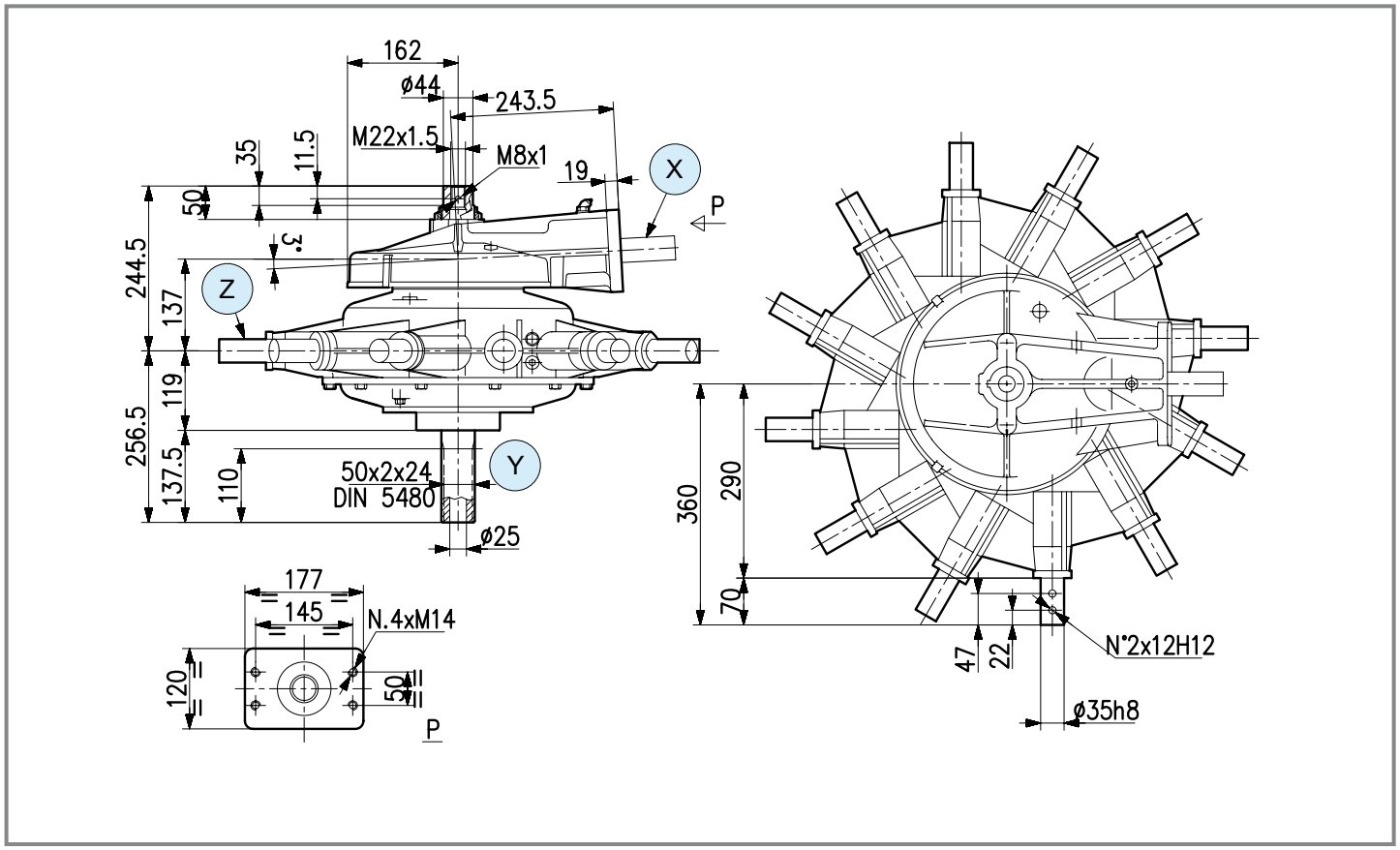

	i	N_1 [rpm]	M_2 [Nm]	nr. Arms	ø Rotor [m]	Shaft type X	Shaft type Y	Shaft type Z	Input	Code	Mounting	Direction	Note	
R	**8.10**	540	210	12	3.6	1 1" 3/8 Z6	23 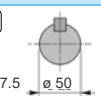 L 137.5 ø 50	24 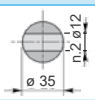 ø 35 n.2 ø12	X	9.799.106	201 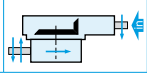	SX	single rotor	std
	8.10	540	210	12	3.6	1 1" 3/8 Z6	23 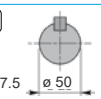 L 137.5 ø 50	24 ø 35 n.2 ø12	X	9.799.112	201 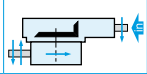	SX	double rotor	std
	8.10	540	210	12	3.6	1 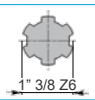 1" 3/8 Z6	23 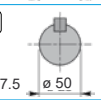 L 137.5 ø 50	24 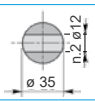 ø 35 n.2 ø12	X	9.799.113	201 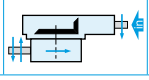	DX	double rotor	std

comer industries

Y-890A

Code **890**

(4.02)

kg [kg]	39	OIL [l]	-

Per configurazioni non a catalogo contattare Servizio Tecnico-Commerciale
For non-catalog configurations contact Technical-Commercial Service

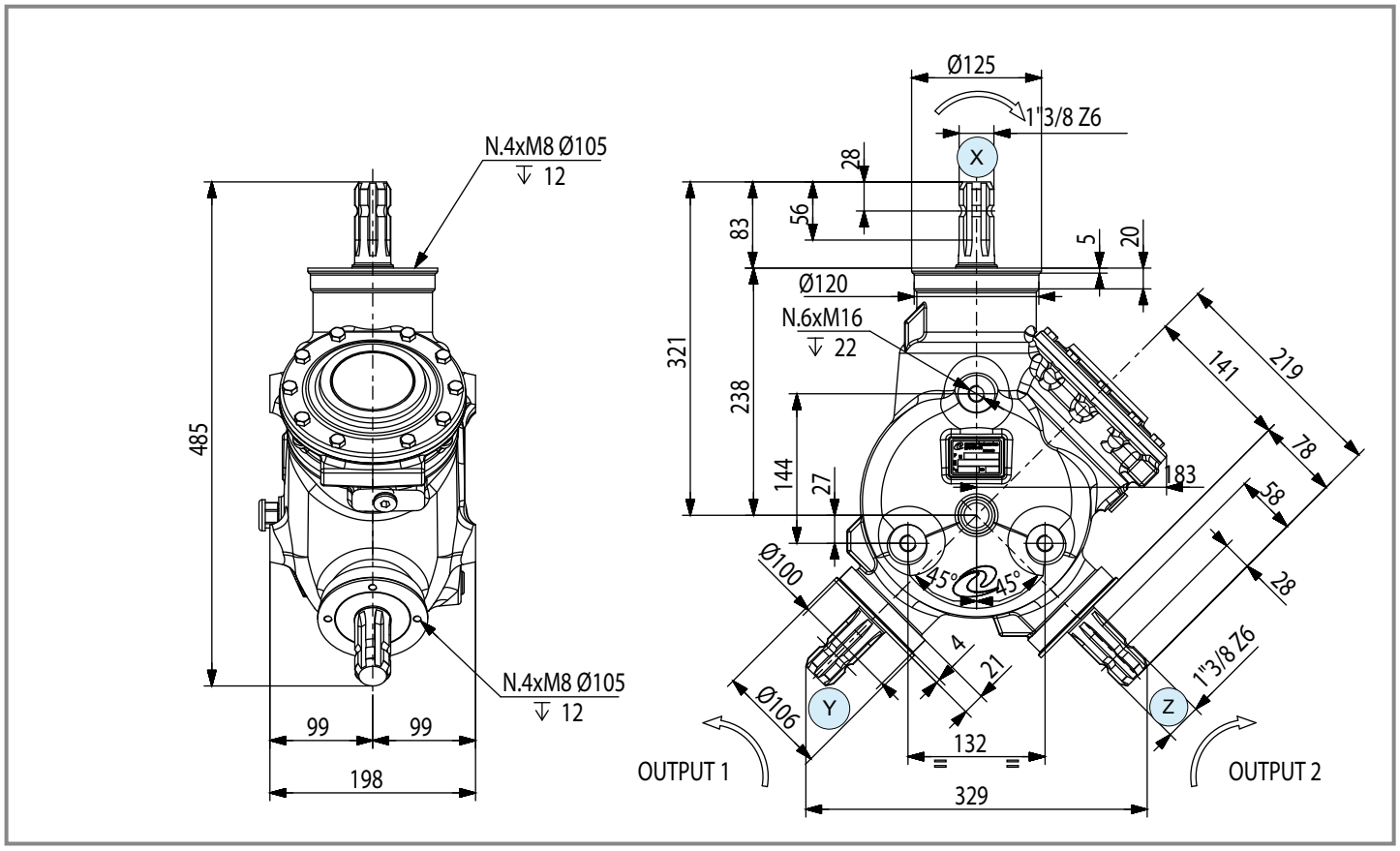

	i	N_1 [rpm]	M_2 [Nm]	Shaft type X	Shaft type Y	Shaft type Z	Input	Code	Mounting	Note	
M ⇨ + ⇨	**1.25**	540	343	1 1" 3/8 Z6	1 1" 3/8 Z6	1 1" 3/8 Z6	X	9.890.001	-	-	std
- ⇨ = ⇨ =	**1.00**	540	429	1 1" 3/8 Z6	1 1" 3/8 Z6	1 1" 3/8 Z6	X	9.890.002	-	-	std
R + ⇨ ⇨	**1.25**	540	536	1 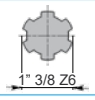 1" 3/8 Z6	1 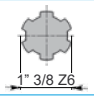 1" 3/8 Z6	1 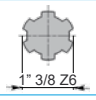 1" 3/8 Z6	X	9.890.003	-	-	std

TB-318J

Code **318.8**

(4.05)

[kg] 25 | [l] 1.2

Per configurazioni non a catalogo contattare Servizio Tecnico-Commerciale
For non-catalog configurations contact Technical-Commercial Service

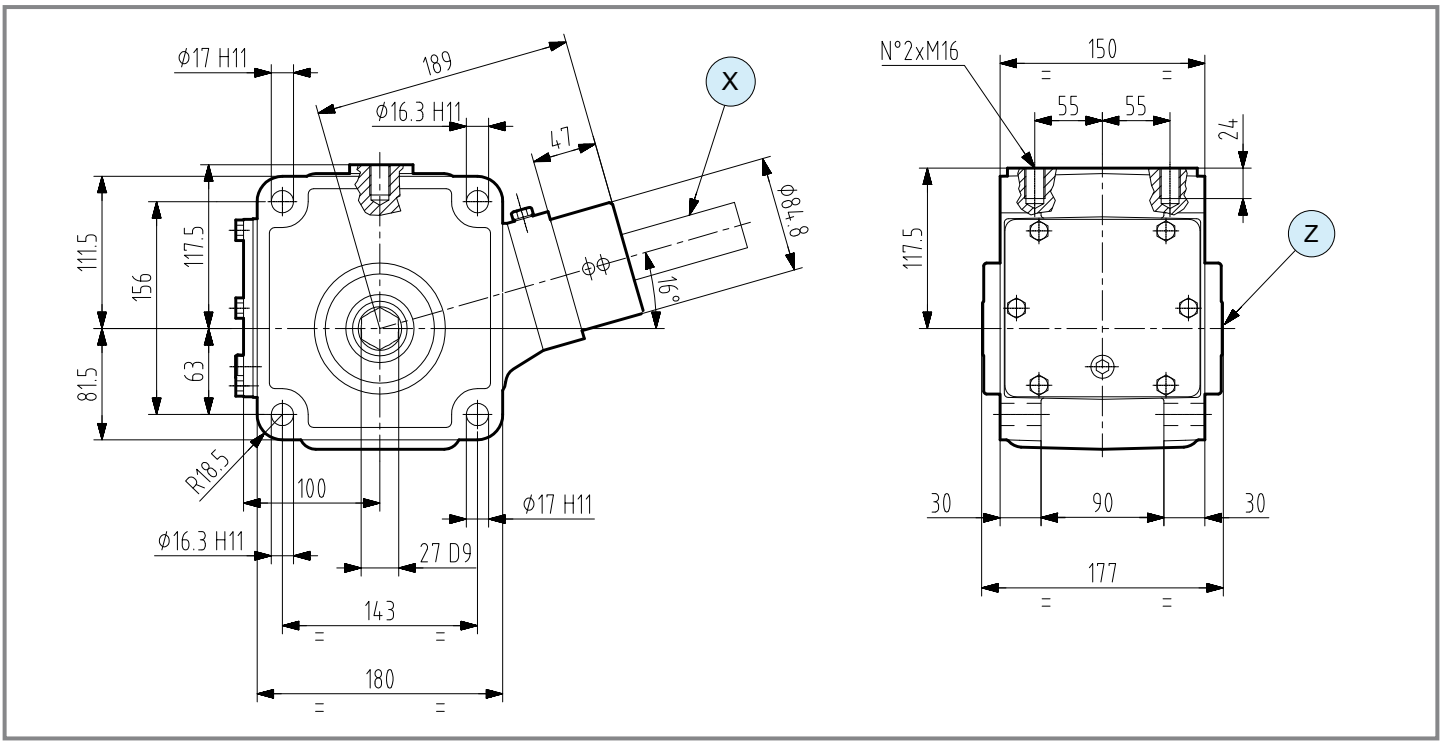

	i	N_1 [rpm]	P_1 [kW]	M_2 [Nm]	Shaft type X	Shaft type Y	Shaft type Z	Input	Code	Mounting	Note	
R	**1.77**	540	20	607	1 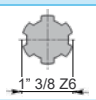 1" 3/8 Z6	-	64 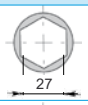 27	X	9.318.800	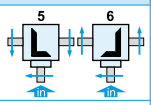	-	std
	1.77	540	20	607	1 1" 3/8 Z6	-	64 27	X	9.318.802	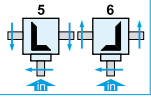	-	std

comer industries

TB-319J

Code **319.8**

(4.05)

[kg] 19 | [l] -

Per configurazioni non a catalogo contattare Servizio Tecnico-Commerciale
For non-catalog configurations contact Technical-Commercial Service

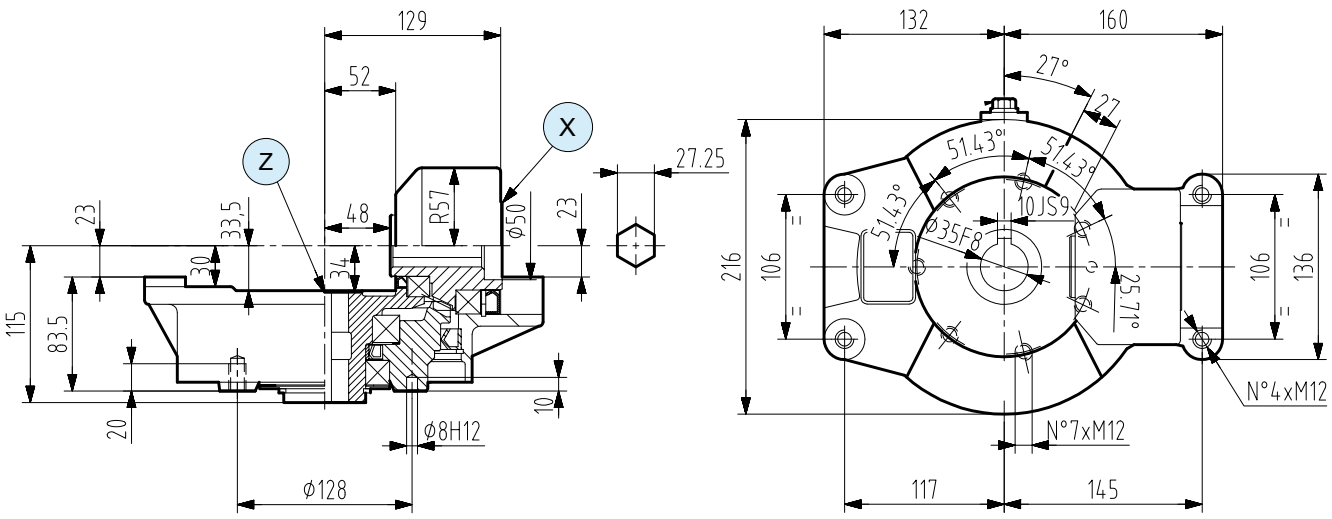

	i	N_1 [rpm]	P_1 [kW]	M_2 [Nm]	Shaft type X	Shaft type Y	Shaft type Z	Input	Code	Mounting	Note	
R	**2.00**	540	6.6	226	65 27.25	-		X	9.319.800	1 2	-	std
	2.00	540	6.6	226	65 27.25	-		X	9.319.801	1 2	-	std

TB-320A

Code **320**

(4.05)

[kg]	28

[l]	2.0

Per configurazioni non a catalogo contattare Servizio Tecnico-Commerciale
For non-catalog configurations contact Technical-Commercial Service

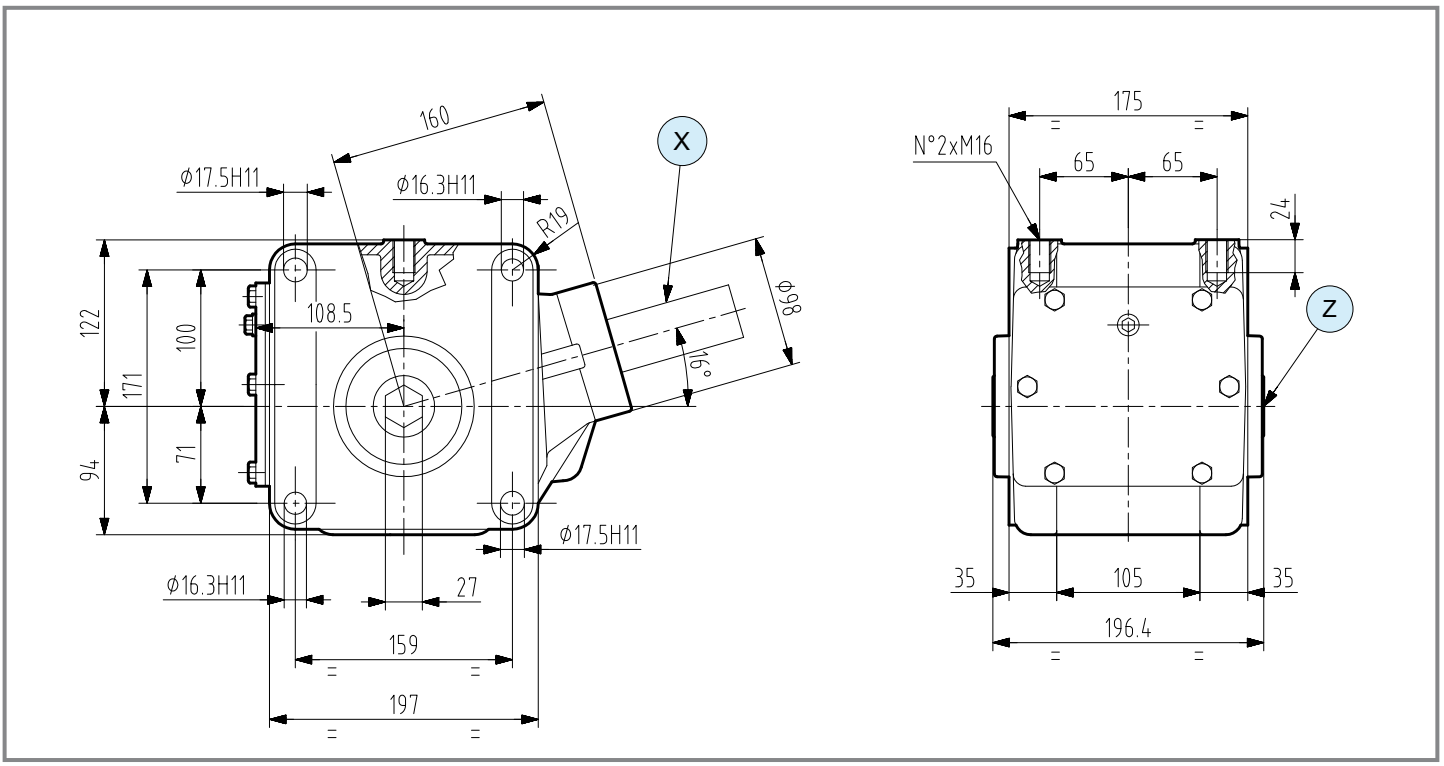

	i	N_1 [rpm]	P_1 [kW]	M_2 [Nm]	Shaft type X	Shaft type Y	Shaft type Z	Input	Code	Mounting	Note	
R	**1.77**	540	33.0	1002	1 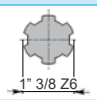 1" 3/8 Z6	-	64 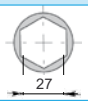 27	X	9.320.003	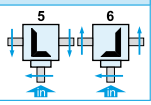	-	std

comer industries

TB-323J

Code **323.8**

(4.05)

[kg] 14.5 | [l] 0.75

Per configurazioni non a catalogo contattare Servizio Tecnico-Commerciale
For non-catalog configurations contact Technical-Commercial Service

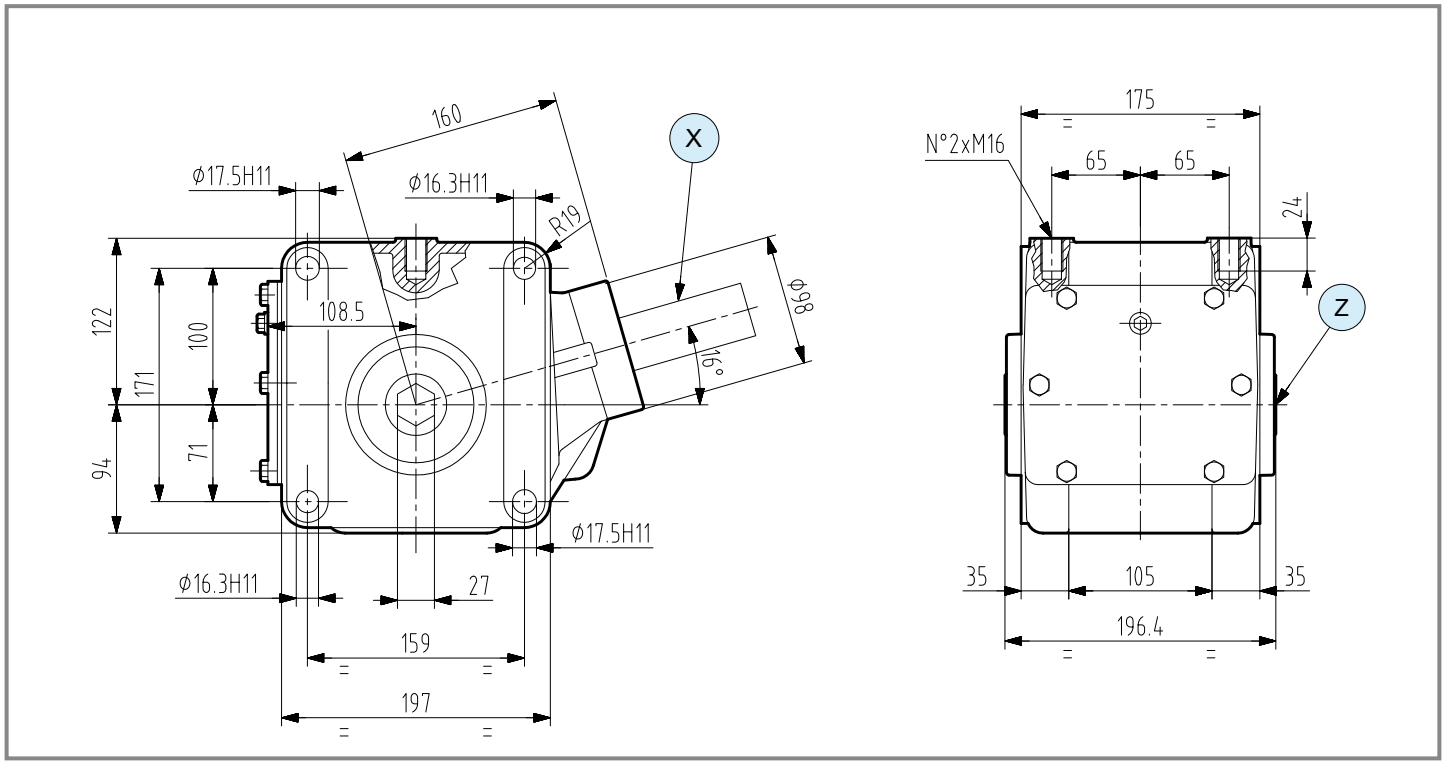

	i	N_1 [rpm]	P_1 [kW]	M_2 [Nm]	Shaft type X	Shaft type Y	Shaft type Z	Input	Code	Mounting	Note	
R	**1.54**	540	14.0	370	1 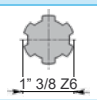 1" 3/8 Z6	-	65 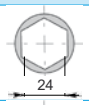 24	X	9.323.802	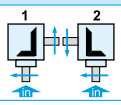	-	std
	1.69	540	14.0	406	1 1" 3/8 Z6	-	65 24	X	9.323.801	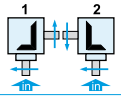	-	std

LB-324J

Code **324.8**

(4.05)

[kg] 14.2 | [l] -

Per configurazioni non a catalogo contattare Servizio Tecnico-Commerciale
For non-catalog configurations contact Technical-Commercial Service

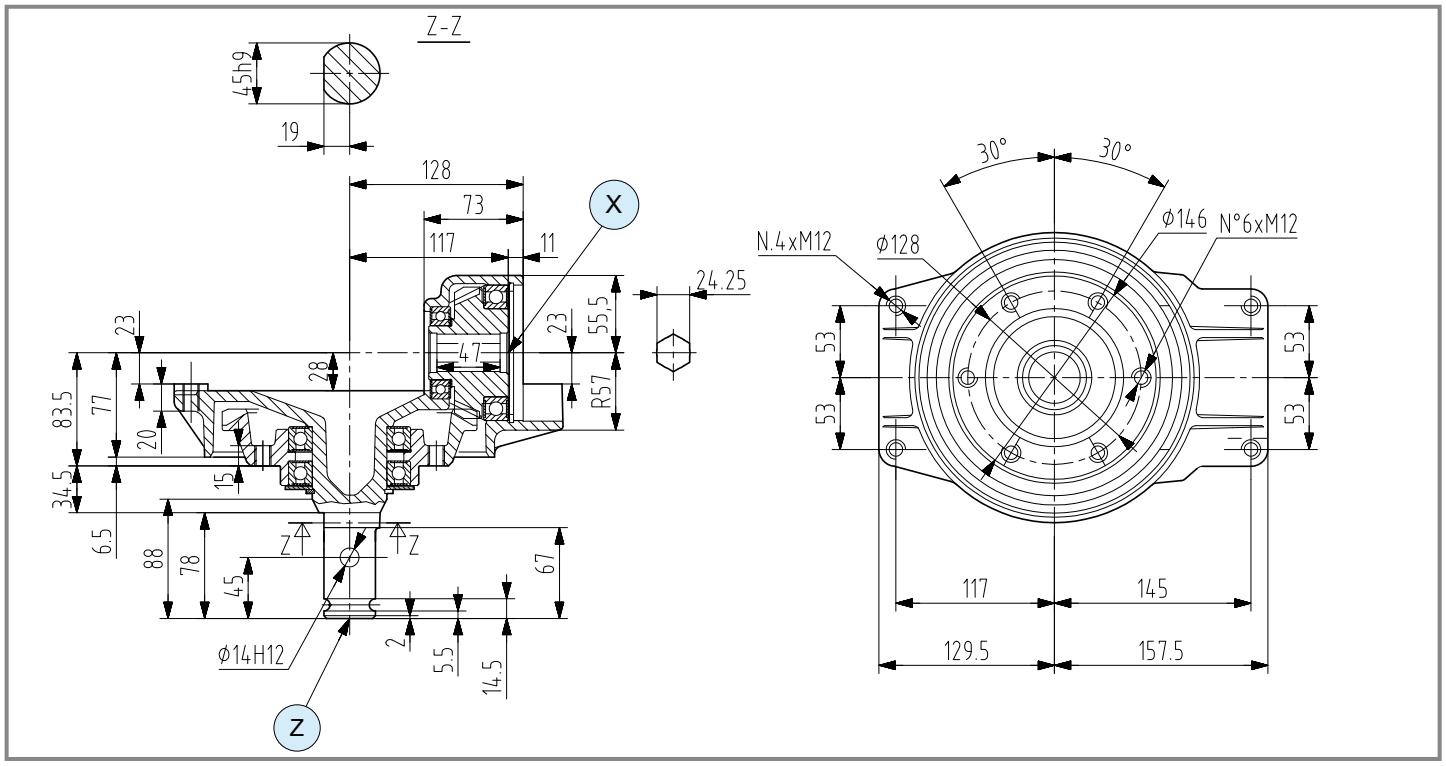

	i	N_1 [rpm]	P_1 [kW]	M_2 [Nm]	Shaft type X	Shaft type Y	Shaft type Z	Input	Code	Mounting	Note	
R	**1.54**	540	14.0	370	66 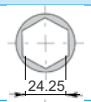 24.25	-		X	9.324.803	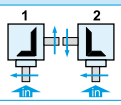	-	std
	2.00	540	6.0	206	66 24.25	-		X	9.324.800	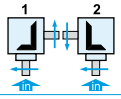	-	std

comer industries

Questa pagina è lasciata intenzionalmente bianca
This page is intentionally left blank

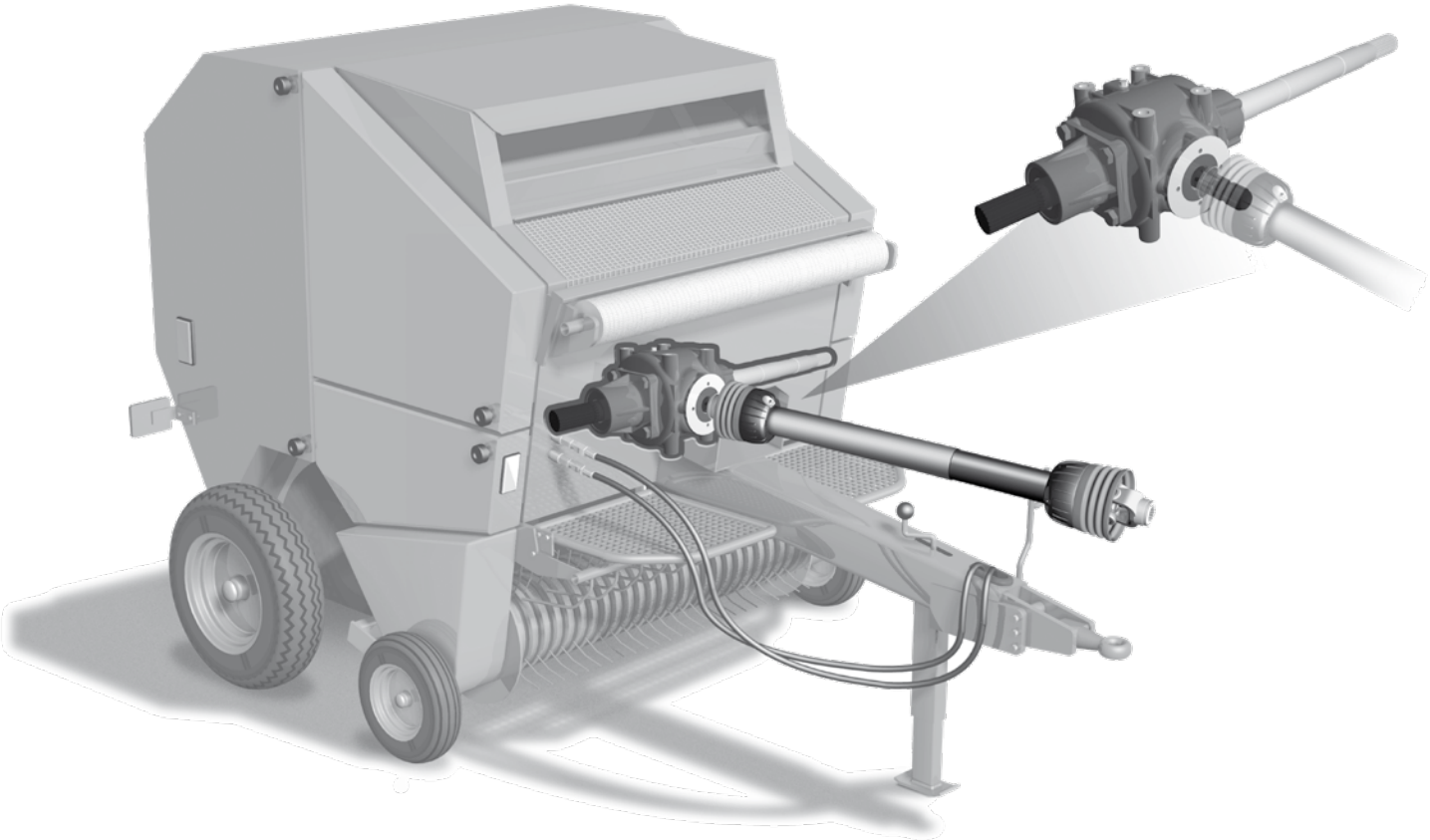

	i	$P_{1\text{ - max}}$ [kW]	$M_{2\text{ - max}}$ [Nm]	Tipologia alberi disponibili *Available type of shafts*	p.
T-304A	M ⇨ ⇨ + - - ⇨ = ⇨ = - R ⇨ + ⇨ 1.93	28	925	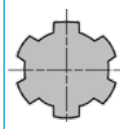 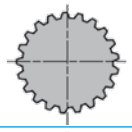	212
TV-290H	M ⇨ ⇨ + - - ⇨ = ⇨ = - R ⇨ + ⇨ 2.07	51.5	1828	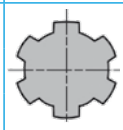 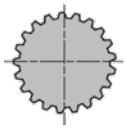	213
T-292E	M ⇨ ⇨ + - - ⇨ = ⇨ = - R ⇨ + ⇨ 1.86	-	47.7	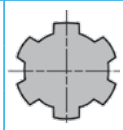 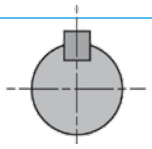	214
T-290HD	M ⇨ ⇨ + - - ⇨ = ⇨ = - R ⇨ + ⇨ 1.63÷3.00	78	2180	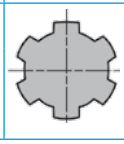 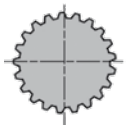	215

T-304A

Code **304**

(4.04)

[kg]	19

[l]	1.1

Per configurazioni non a catalogo contattare Servizio Tecnico-Commerciale
For non-catalog configurations contact Technical-Commercial Service

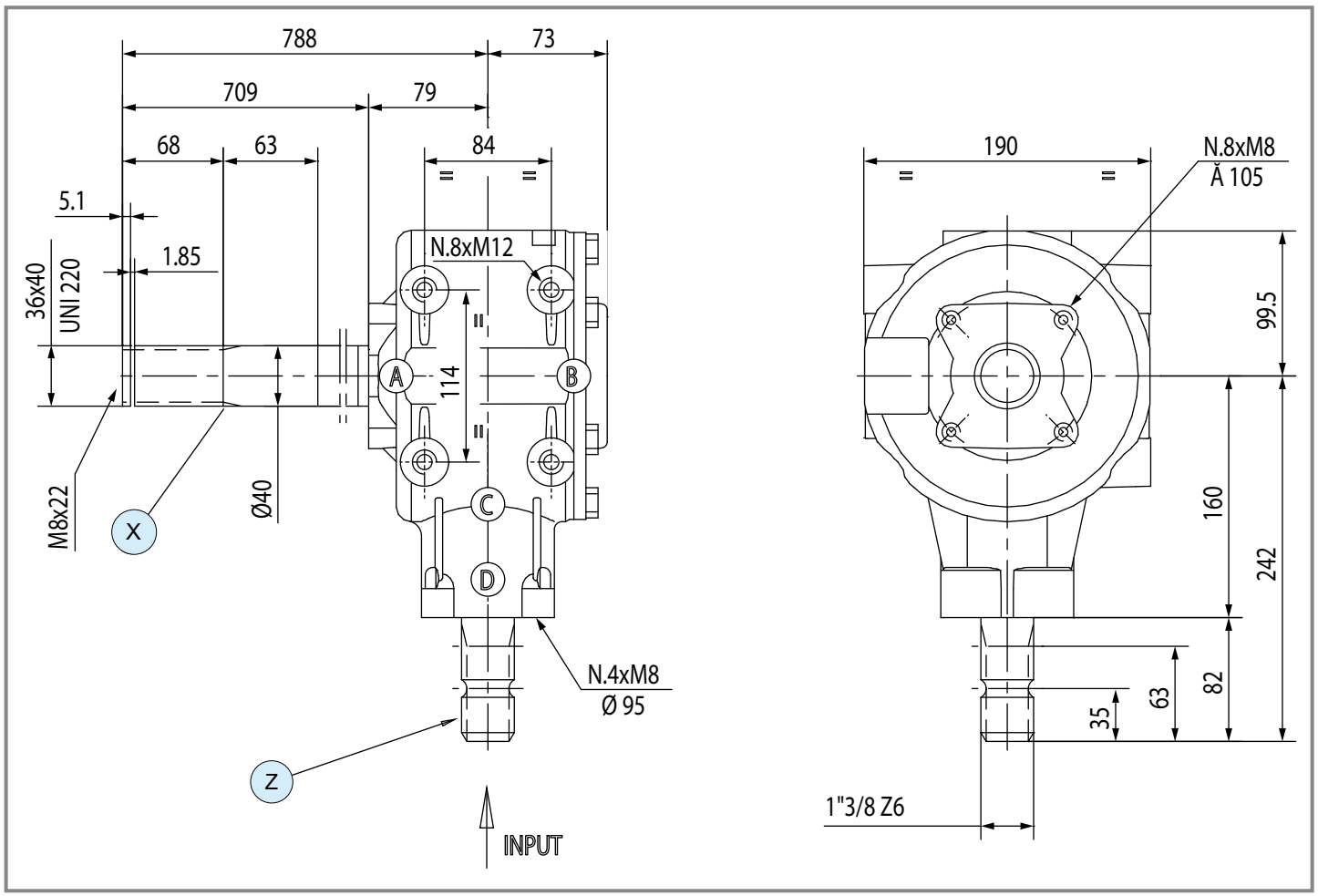

	i	N_1 [rpm]	P_1 [kW]	M_2 [Nm]	Shaft type X	Shaft type Y	Shaft type Z	Input	Code	Mounting	Note	
R	**1.93**	540	28.0	925	7 36x40 DIN5482	-	1 1" 3/8 Z6	Z	9.304.216	3 4	-	special

comer industries

TV-290H

Code **290**

(4.04)

[kg]	30

[l]	2.3

Per configurazioni non a catalogo contattare Servizio Tecnico-Commerciale
For non-catalog configurations contact Technical-Commercial Service

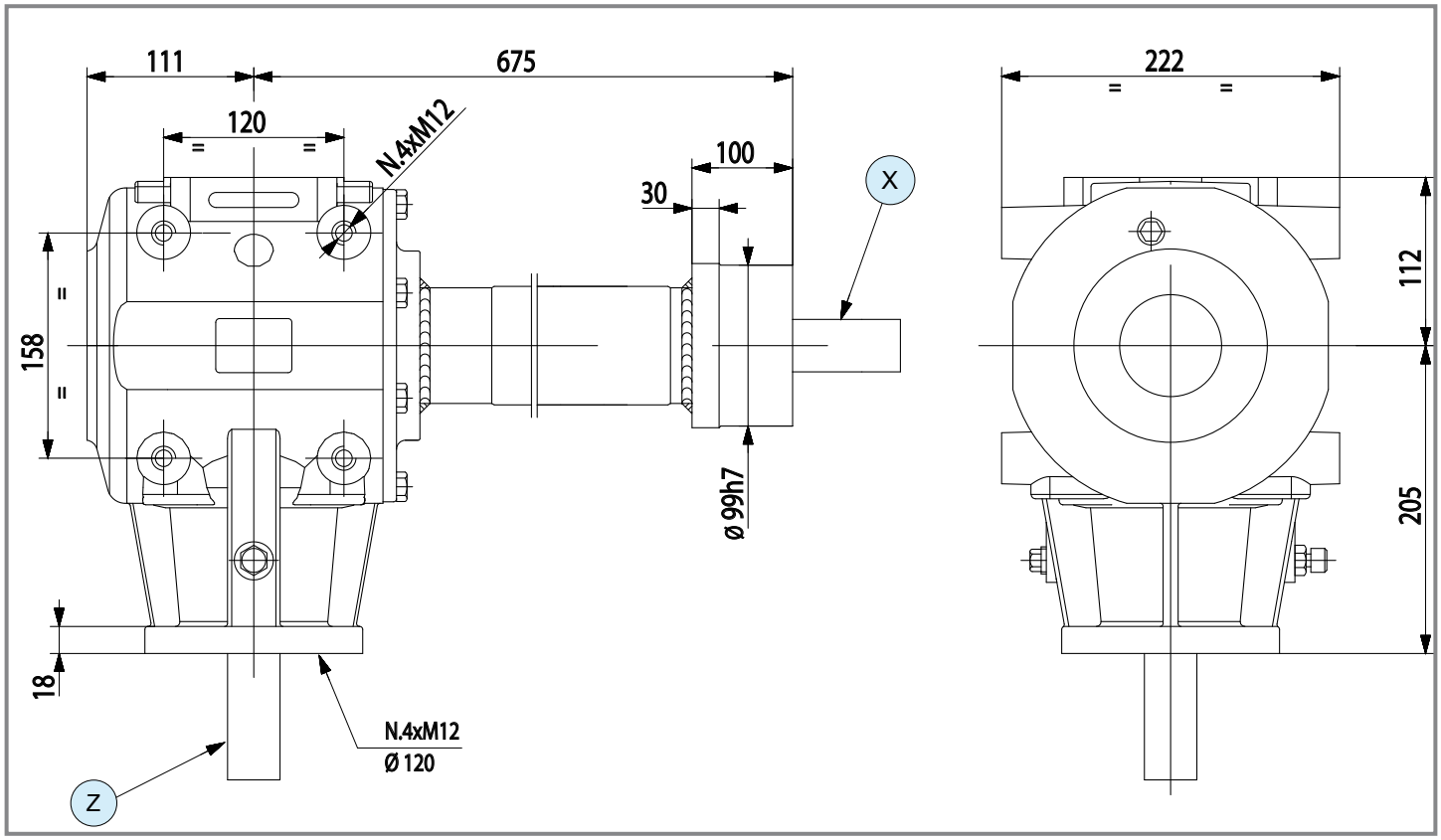

	i	N_1 [rpm]	P_1 [kW]	M_2 [Nm]	Shaft type X	Shaft type Y	Shaft type Z	Input	Code	Mounting	Note	
R	**2.07**	540	51.5	1828	7 36x40 DIN5482	-	1 1" 3/8 Z6	Z	9.290.347	35	-	special

Presse raccoglitrici
Round Balers

T-292E

Code **292**

(4.04)

[kg] 74.8 | [l]

Per configurazioni non a catalogo contattare Servizio Tecnico-Commerciale
For non-catalog configurations contact Technical-Commercial Service

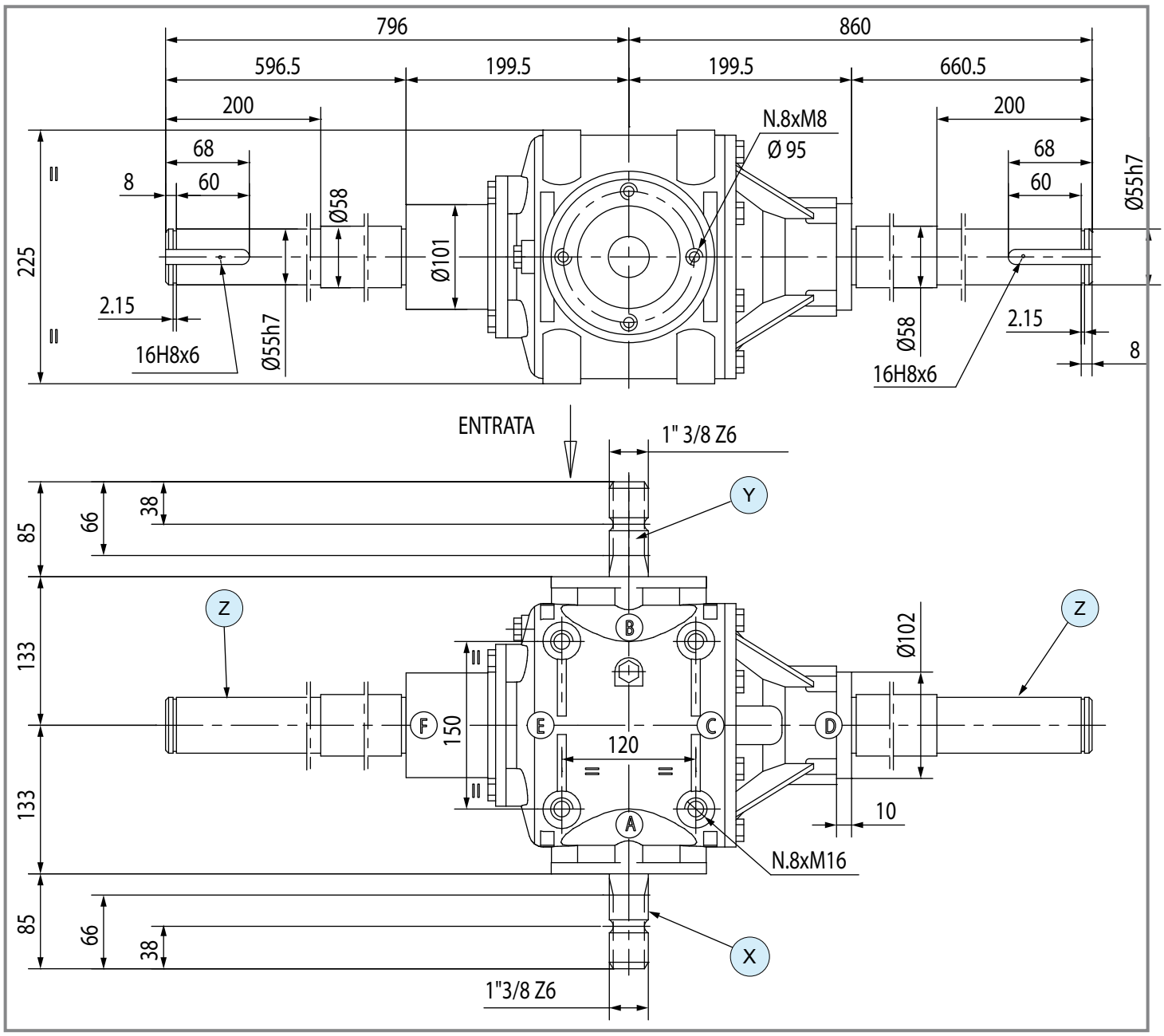

	i	N_1 [rpm]	P_1 [kW]	M_2 [Nm]	Shaft type X	Shaft type Y	Shaft type Z	Input	Code	Mounting	Note	
R	**1.86**	540	47.7	-	1 — 1" 3/8 Z6	1 — 1" 3/8 Z6	49 — L 200, ø 55	X	9.292.305	-	-	special

comer industries

T-290HD

Code **290**

(4.04)

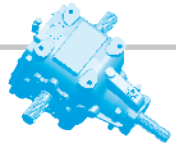

[kg] 41 | [l] 2.3

Per configurazioni non a catalogo contattare Servizio Tecnico-Commerciale
For non-catalog configurations contact Technical-Commercial Service

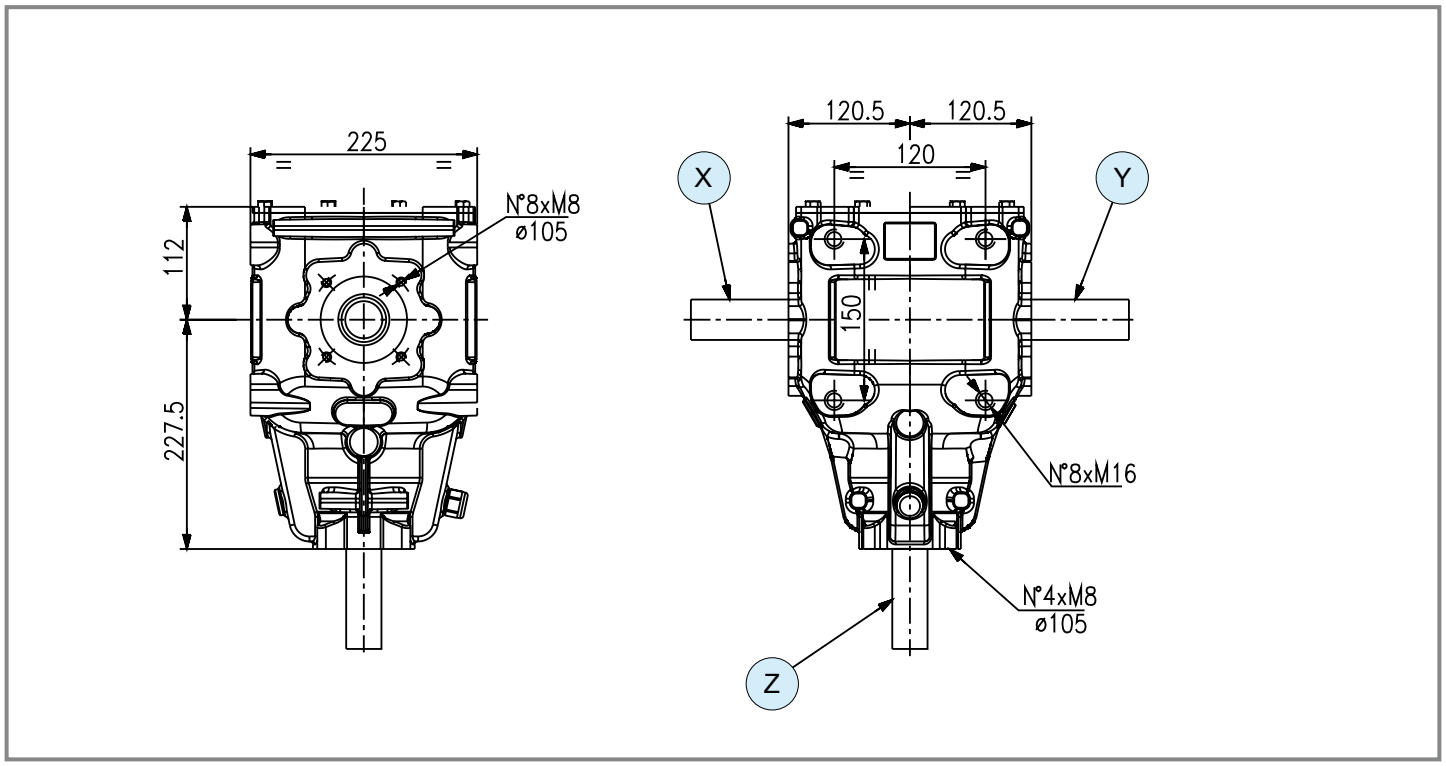

	i	N_1 [rpm]	P_1 [kW]	M_2 [Nm]	Shaft type X	Shaft type Y	Shaft type Z	Input	Features	Code	Mounting	
					5 - Rinforzato / *Reinforced*							
R	**1.63**	540	78.0	2180	8 40x2x18 DIN5480	8 40x2x18 DIN5480	1 1" 3/8 Z6	Z	5	9.290.100	5 6	special
R	**3.00**	1000	58.0	1694	8 40x2x18 DIN5480	8 40x2x18 DIN5480	1 1" 3/8 Z6	Z	5	9.290.102	5 6	special

CARRI MISCELATORI E LANCIA PAGLIA
FEED MIXER MACHINES AND STRAW BLOWER

(4.06) (4.09)

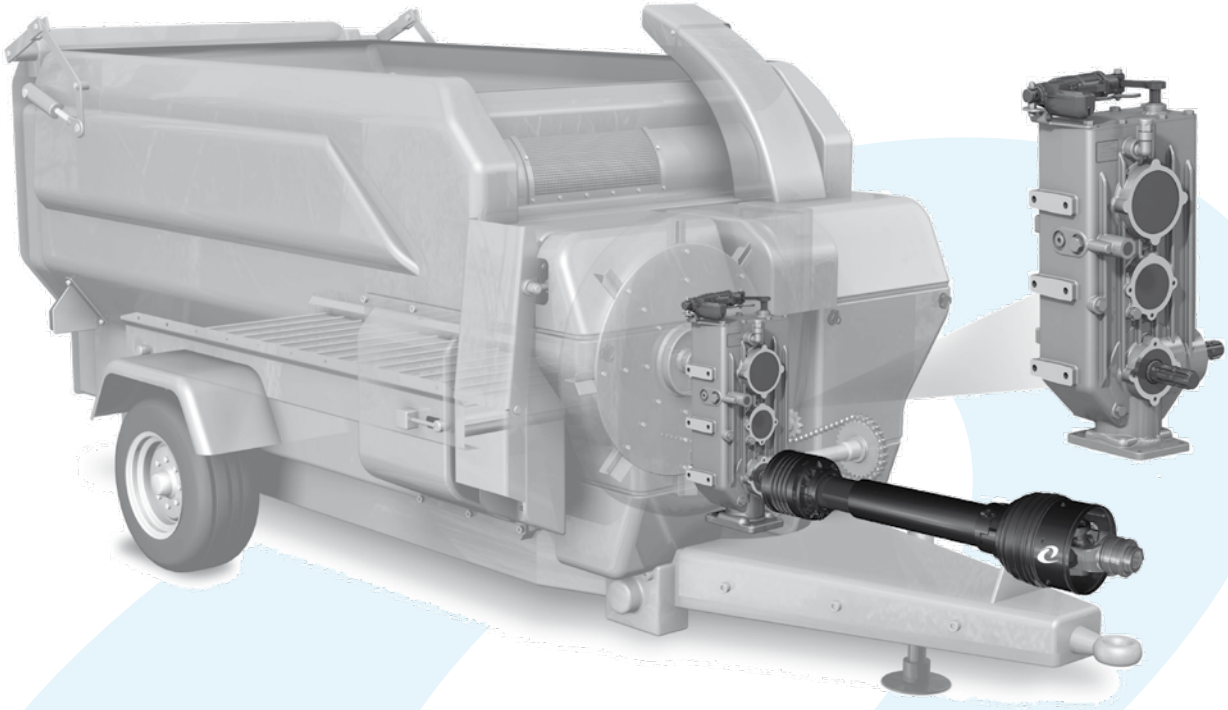

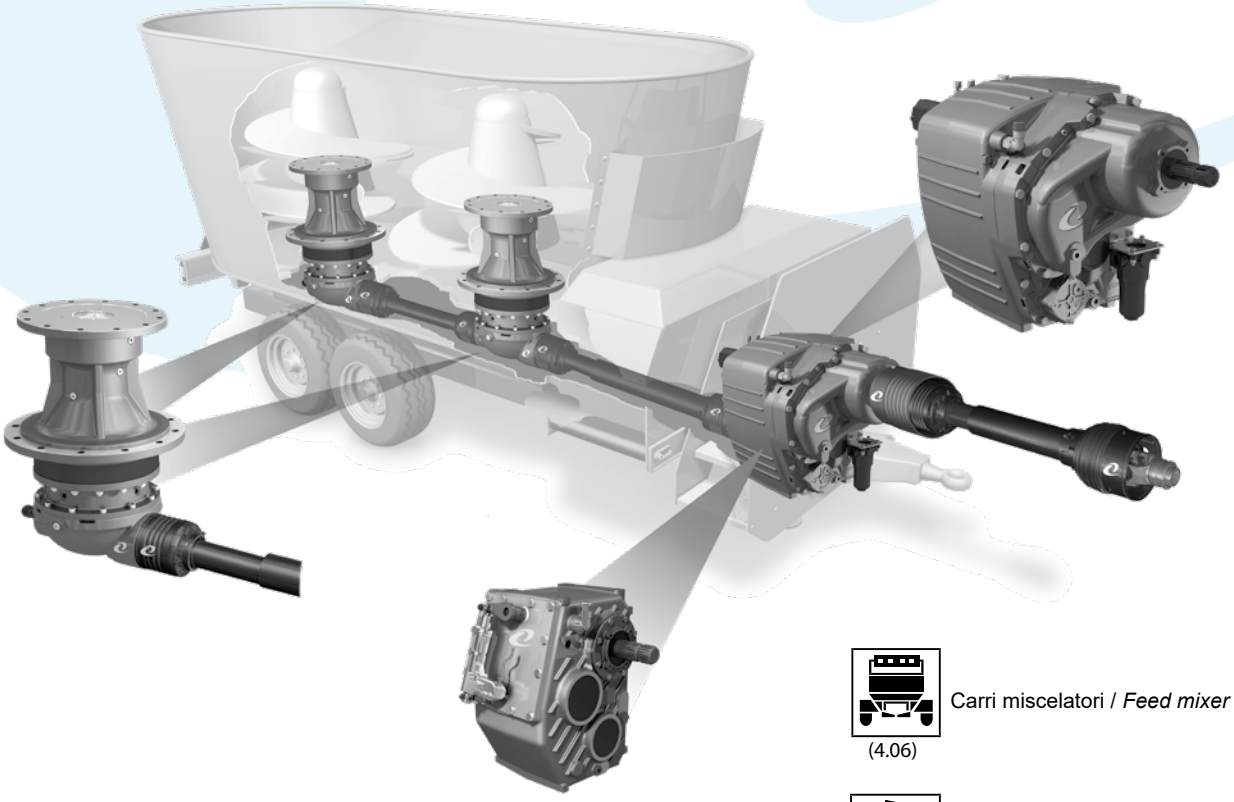

(4.06) Carri miscelatori / *Feed mixer machines*

(4.09) Lancia paglia / Straw Blower

Per configurazioni non a catalogo contattare Servizio Tecnico-Commerciale
For non-catalog configurations contact Technical-Commercial Service

	i	P_{1-max} [kW]	M_{2-max} [Nm]	Tipologia alberi disponibili *Available type of shafts*	p.
DP-732B	M ⇨ + ⇨ -	59.0	-		219
	- ⇨ = ⇨ -				
	R + ⇨ 1.00÷1.88				
C-3A	M ⇨ + ⇨ 1.00÷1.25	110.3	-	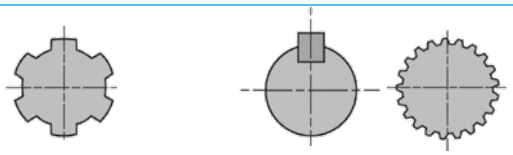	220
	- ⇨ = ⇨ -				
	R + ⇨ 1.00÷3.26				
A-613R	M ⇨ + ⇨ -	180.0	-	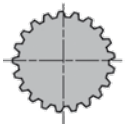	222
	- ⇨ = ⇨ -				
	R + ⇨ 1.00÷2.70				
A-614R	M ⇨ + ⇨ -	186.5	5650	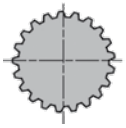	223
	- ⇨ = ⇨ 1.00				
	R + ⇨ 1.80÷3.20				
PGA-502	M ⇨ + ⇨ -	-	3810	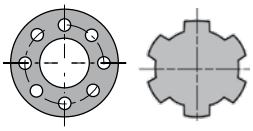	224
	- ⇨ = ⇨ -				
	R + ⇨ 15.51				
N-673J	M ⇨ + ⇨ -	55.1	10206	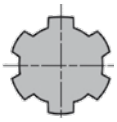	226
	- ⇨ = ⇨ -				
	R + ⇨ 10.80÷15.00				
PGA-1202	M ⇨ + ⇨ -	-	12800		227
	- ⇨ = ⇨ -				
	R + ⇨ 13.90÷19.40				
PGA-1602	M ⇨ + ⇨ -	-	15700		228
	- ⇨ = ⇨ -				
	R + ⇨ 16.13÷21.10				

	i	P_{1-max} [kW]	M_{2-max} [Nm]	Tipologia alberi disponibili *Available type of shafts*	p.
PGA-1602 double	M - - - R 13.40÷21.10	-	17000		229
PGA-1603	M - - - R 25.89	-	20000		230
PGA-1603 Hyd. motor	M - - - R 50.00÷83.26		18020		231
PGA-2102 **PGA-2103**	M - - - R 13.56÷23.30	-	21000		232
PGA-2502	M - - - R 13.60÷19.60	-	23780		233
PGA-2503	M - - - R 72.00÷86.65	-	23780		234
PGA-3003	M - - - R 29.34÷35.40	-	30760		235
PGA-4203	M - - - R 31.60	-	142000		236
D-732A	M - - - R 1.00÷1.93	91.9	-	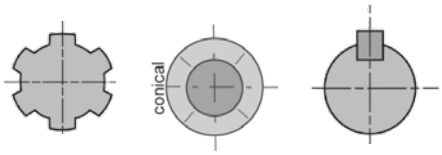	237

Per configurazioni non a catalogo contattare Servizio Tecnico-Commerciale
For non-catalog configurations contact Technical-Commercial Service

DP-732B

Code **732**

(4.06)

(4.09)

[kg] 62 | [l] 5.6

Per configurazioni non a catalogo contattare Servizio Tecnico-Commerciale
For non-catalog configurations contact Technical-Commercial Service

Disponibile con attuatore elettrico 2 e 3 posizioni.
Available with electric actuator 2 and 3 positions.

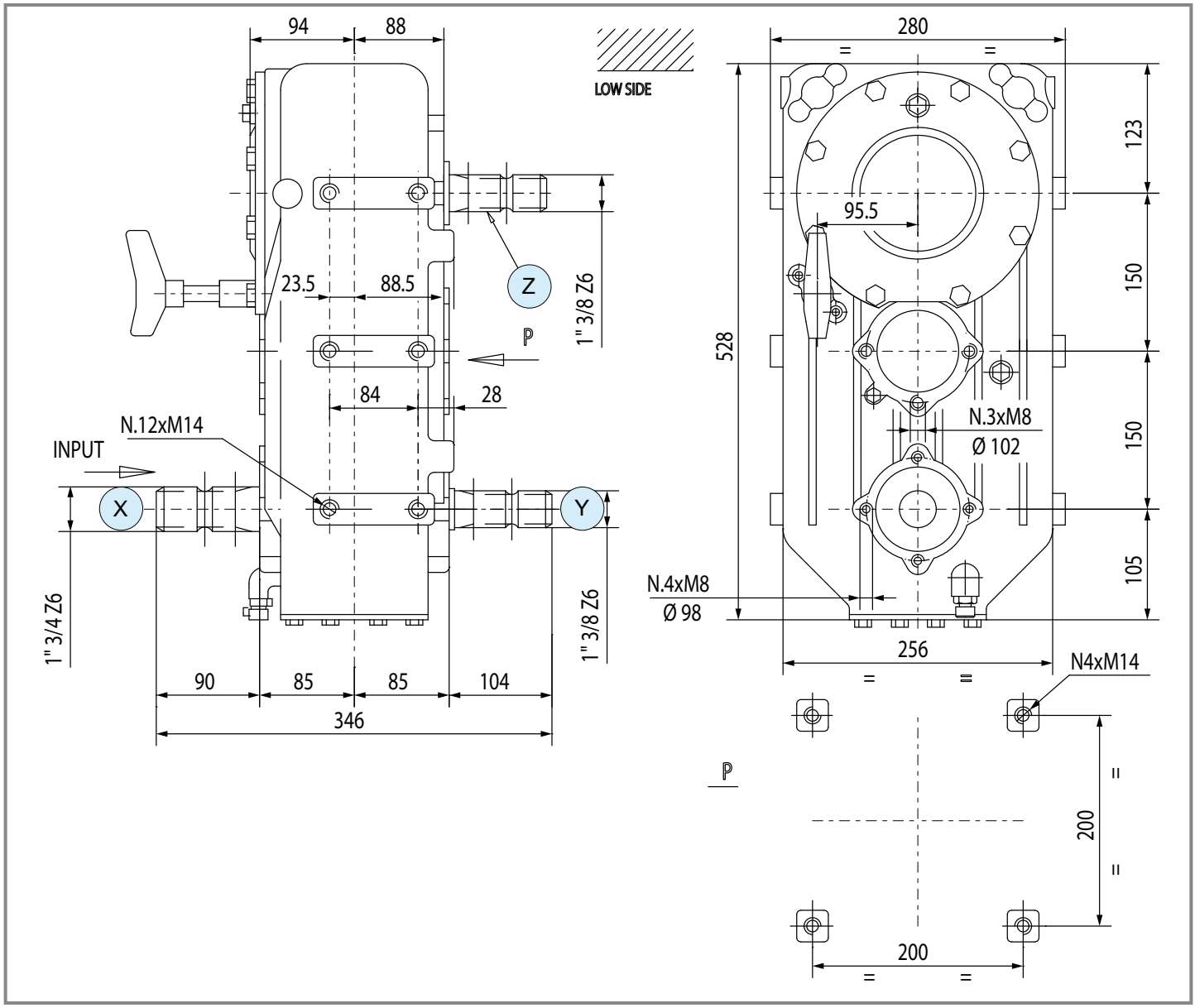

	i	N_1 [rpm]	P_1 [kW]	Shaft type X	Shaft type Y	Shaft type Z	Input	Features	Code	Mounting	
R	1.00 1.41	540	59.0	5 1" 3/4 Z6	1 1" 3/8 Z6	1 1" 3/8 Z6	X	-	9.732.346	231 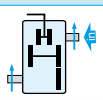	std
	1.00 1.88	540	59.0	6 1"3/4 Z20	-	1 1" 3/8 Z6	X	A.P. APH - Ø22 CH6x6	9.732.347	231	std
	1.00 1.88	540	59.0	5 1" 3/4 Z6	1 1" 3/8 Z6	6 1"3/4 Z20	X	-	9.732.376	231 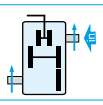	std
	1.00 1.88	540	59.0	6 1"3/4 Z20	1 1" 3/8 Z6	5 1" 3/4 Z6	X	-	9.732.379	231 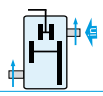	std

C-3A

Code **5367**

(4.06)

[kg] 100 | [l] 9.3

Per configurazioni non a catalogo contattare Servizio Tecnico-Commerciale
For non-catalog configurations contact Technical-Commercial Service

Disponibile con attuatore idraulico o elettrico 3 posizioni.
Available with hydraulic or electric actuator 3 positions.

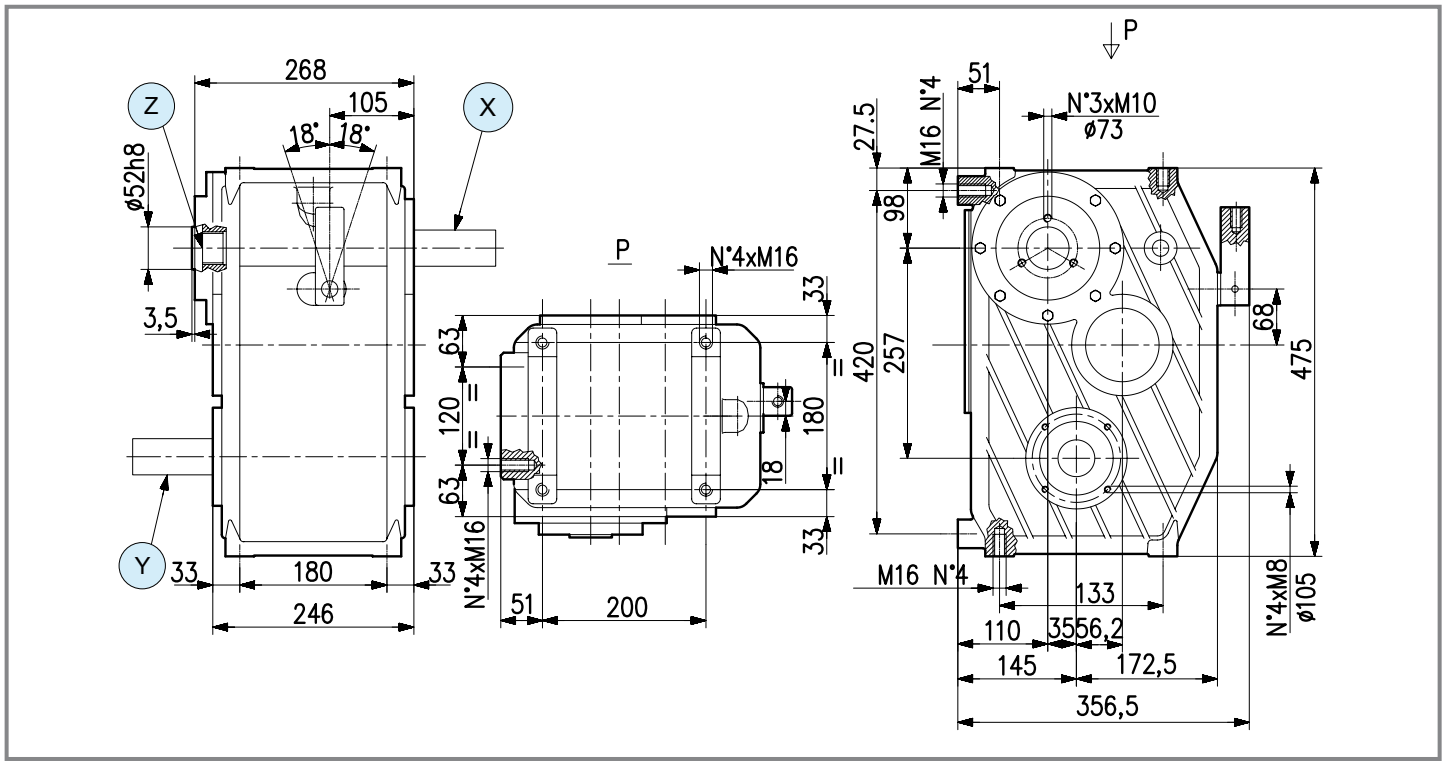

	i	N_1 [rpm]	P_1 [kW]	Shaft type X	Shaft type Y	Shaft type Z	Input	Options Z	Features	Code	Mounting	
				5 - Rinforzato / *Reinforced*	6 - Cambio facilitato / *Quick shift*							
R	**1.00 1.28**	540	92.0	6 1"3/4 Z20	6 1"3/4 Z20	A.P. APH - 36x40 DIN	X	-	-	5367.005.013	-	std
R	**1.00 1.50**	540	92.0	6 1"3/4 Z20	6 1"3/4 Z20	A.P. APH - 36x40 DIN	X	-	-	5367.008.015	-	std
R	**1.00 1.80**	540	92.0	1 1" 3/8 Z6	6 1"3/4 Z20	A.P. APH - 36x40 DIN	X	16 ø 22	-	5367.014.018	-	std
	1.00 1.80	540	92.0	6 1"3/4 Z20	6 1"3/4 Z20	A.P. APH - 36x40 DIN	X	-	-	5367.001.018	-	std
	1.00 1.80	540	92.0	1 1" 3/8 Z6	6 1"3/4 Z20	A.P. APH - 36x40 DIN	X	-	6	5367.129.018	-	std
	1.00 1.80	540	110.3	6 1"3/4 Z20	6 1"3/4 Z20	A.P. APH - 36x40 DIN	X	16 ø 22	5	5367.057.018	-	std

C-3A

Code **5367**

(4.06)

	i	N_1 [rpm]	P_1 [kW]	5 - Rinforzato / *Reinforced* Shaft type X	Y	Z	Input	Options Z	Features	Code	Mounting	
R	**1.00 1.80**	540	92.0	5 1" 3/4 Z6	6 1"3/4 Z20	A.P. SAE B - 36x40 DIN	X	-	-	5367.013.018	-	std
	1.28 2.30	540	92.0	5 1" 3/4 Z6	6 1"3/4 Z20	A.P. SAE B - 16/32 Z13	X	-	-	5367.026.023	-	std
	1.32 2.74	540	110.3	5 1" 3/4 Z6	5 1" 3/4 Z6	A.P. SAE B - 36x40 DIN	X	61 16/32" DP Z13	5	5367.117.027	-	std
	1.32 2.74	540	110.3	5 1" 3/4 Z6	5 1" 3/4 Z6	5 1" 3/4 Z6	X	-	5	5367.116.027	-	std
	1.51 2.73	1000	92.0	6 1"3/4 Z20	6 1"3/4 Z20	A.P. APH - 36x40 DIN	X	-	-	5367.042.027	-	std
	1.57 3.26	1000	110.3	5 1" 3/4 Z6	6 1"3/4 Z20	-	X	-	5	5367.101.032	-	std
	1.57 3.26	1000	110.3	6 1"3/4 Z20	6 1"3/4 Z20	A.P. APH - 36x40 DIN	X	-	5	5367.054.032	-	std
	1.80 2.73	540	110.3	6 1"3/4 Z20	6 1"3/4 Z20	A.P. APH - 36x40 DIN	X	-	5	5367.069.027	-	std
	1.80 3.20	1000	110.3	5 1" 3/4 Z6	5 1" 3/4 Z6	A.P. APH - 36x40 DIN	X	16 ø 22	5	5367.061.032	-	std
MR	**1:1.05 2.18:1**	540	92.0	6 1"3/4 Z20	6 1"3/4 Z20	1 1" 3/8 Z6	X	-	-	5367.114.022	-	std
	1:1.25 1.67:1	540	110.3	6 1"3/4 Z20	6 1"3/4 Z20	A.P. APH - 36x40 DIN	X	-	5	5367.053.016	-	std

A-613R

Code **613**

(4.06)

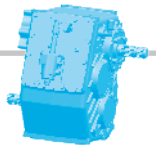

[kg] 105 | [l] -

Per configurazioni non a catalogo contattare Servizio Tecnico-Commerciale
For non-catalog configurations contact Technical-Commercial Service

Disponibile con attuatore idraulico o elettrico 3 posizioni.
Available with hydraulic or electric actuator 3 positions.

Ingranaggi Elicoidali.
Helical Gears.

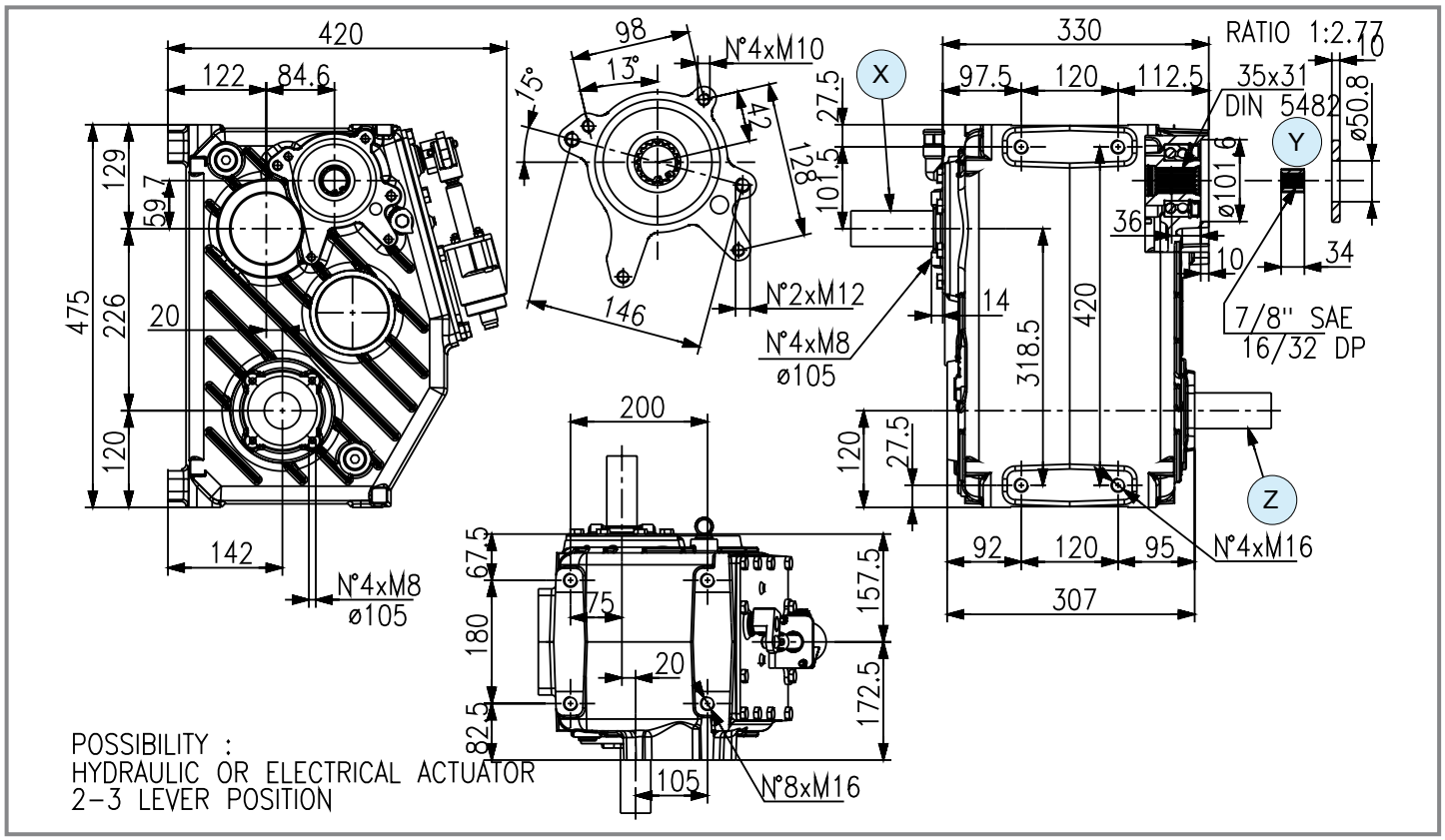

	i	N_1 [rpm]	P_1 [kW]	Shaft type X	Shaft type Y	Shaft type Z	Input	Option Y	Code	Mounting	
- R	1.00 1.30	540	132.0	6 1"3/4 Z20	SAE B/GR3 - 35x31 DIN	6 1"3/4 Z20	X	61 16/32" DP Z13	9.613.006	231	std
- R	1.00 1.50	540	132.0	6 1"3/4 Z20	SAE B/GR3 - 35x31 DIN	6 1"3/4 Z20	X	61 16/32" DP Z13	9.613.003	231	std
- R	1.00 1.50	1000	180.0	6 1"3/4 Z20	SAE B/GR3 - 35x31 DIN	6 1"3/4 Z20	X	61 16/32" DP Z13		231	std
- R	1.00 1.80	540	132.0	6 1"3/4 Z20	SAE B/GR3 - 35x31 DIN	6 1"3/4 Z20	X	61 16/32" DP Z13	9.613.001	231	std
- R	1.00 1.80	1000	180.0	6 1"3/4 Z20	SAE B/GR3 - 35x31 DIN	6 1"3/4 Z20	X	61 16/32" DP Z13		231	std
R	1.80 2.70	1000	150.0	6 1"3/4 Z20	SAE B/GR3 - 35x31 DIN	6 1"3/4 Z20	X	61 16/32" DP Z13	9.613.004	231	std

A-614R

Code **614**

(4.06)

[kg] 255 | [l] -

Per configurazioni non a catalogo contattare Servizio Tecnico-Commerciale
For non-catalog configurations contact Technical-Commercial Service

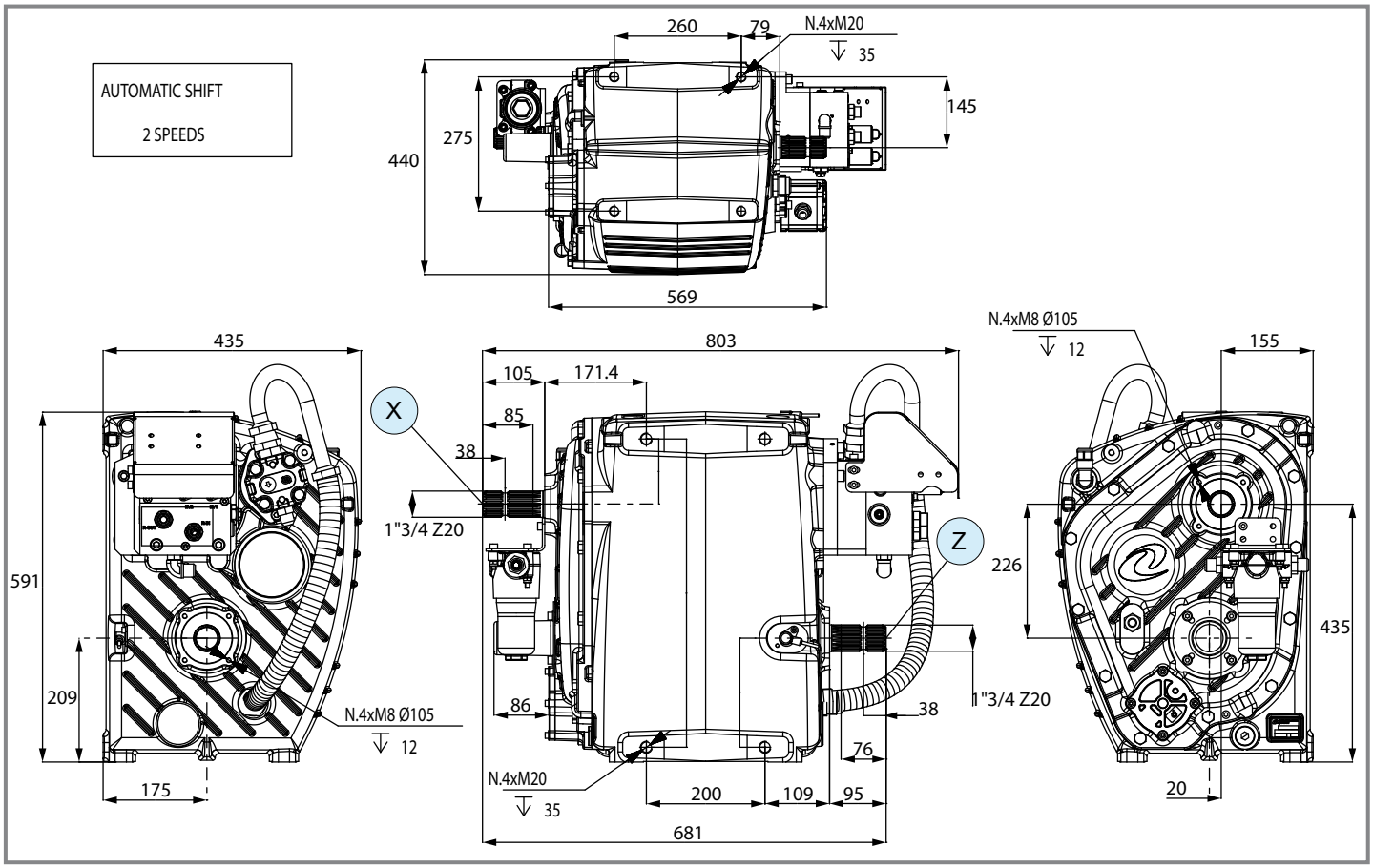

	i	N_1 [rpm]	P_1 [kW]	M_2 [Nm]	Shaft type X	Shaft type Y	Shaft type Z	Input	Features	Code	Mounting	
- R	**1.00** **1.80**	540	134.0	2370 4260	6 1"3/4 Z20	-	6 1"3/4 Z20	X	2 speed	9.614.002	-	special
- R	**1.00** **1.80**	1000	186.5	1780 3200								
- R	**1.00** **1.80** **3.20**	1000	186.5	1780 3200 5650	6 1"3/4 Z20	-	6 1"3/4 Z20	X	3 speed	9.614.602	-	special

PGA-502

Code **5714**

(4.06)

[kg] 180 | [l] 11

Per configurazioni non a catalogo contattare Servizio Tecnico-Commerciale
For non-catalog configurations contact Technical-Commercial Service

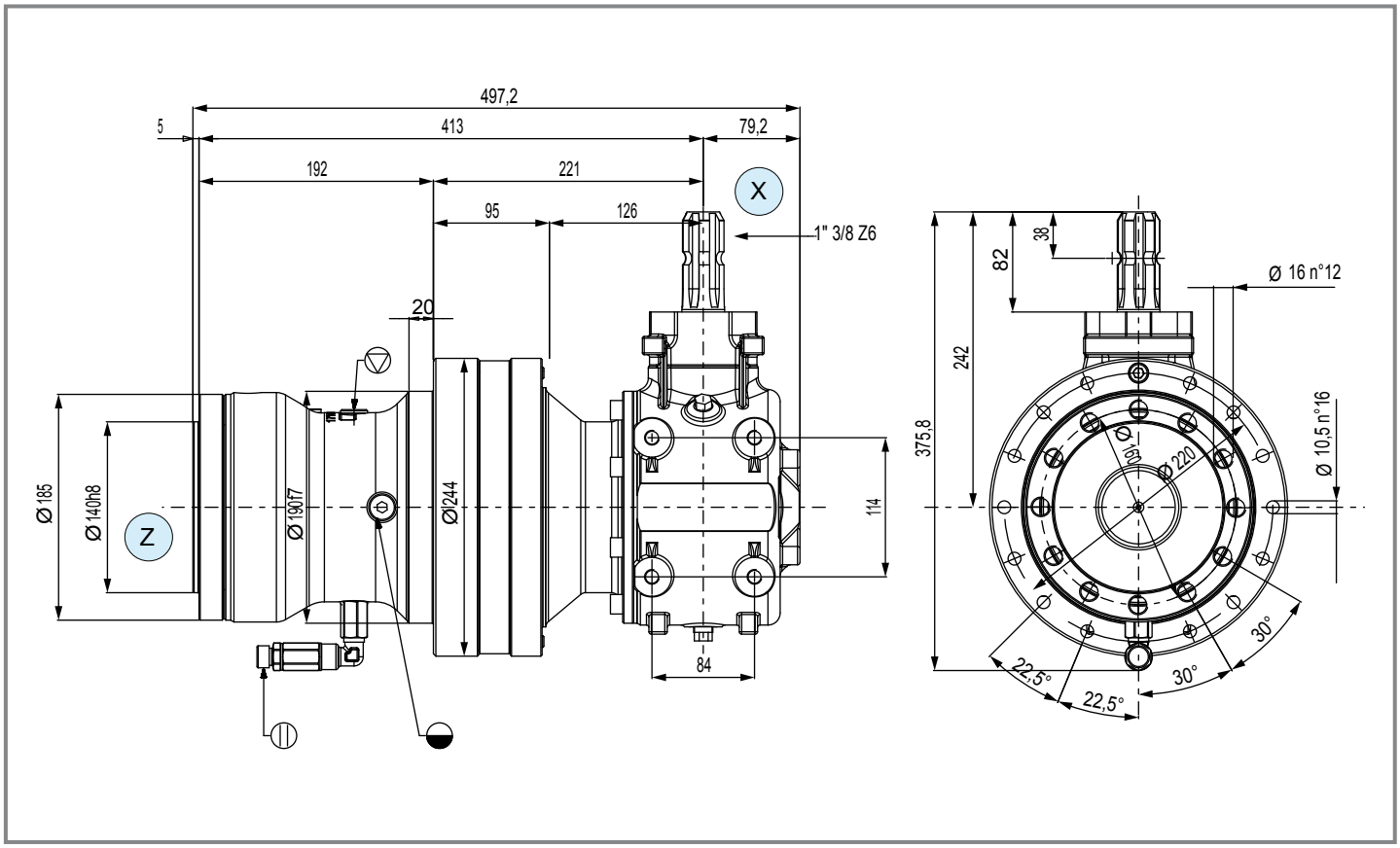

	i	N_1 [rpm]	M_2 [Nm]	Shaft type X	Shaft type Y	Shaft type Z	Input	Features	Code	Mounting	
R	**15.51**	540	3810	1 1" 3/8 Z6	-		X	-	5714.500.0502	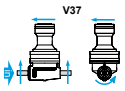 V37	special

comer industries

Questa pagina è lasciata intenzionalmente bianca
This page is intentionally left blank

N-673J

Code **673.8**

(4.06)

[kg] 110 | [l] 1.8

Per configurazioni non a catalogo contattare Servizio Tecnico-Commerciale
For non-catalog configurations contact Technical-Commercial Service

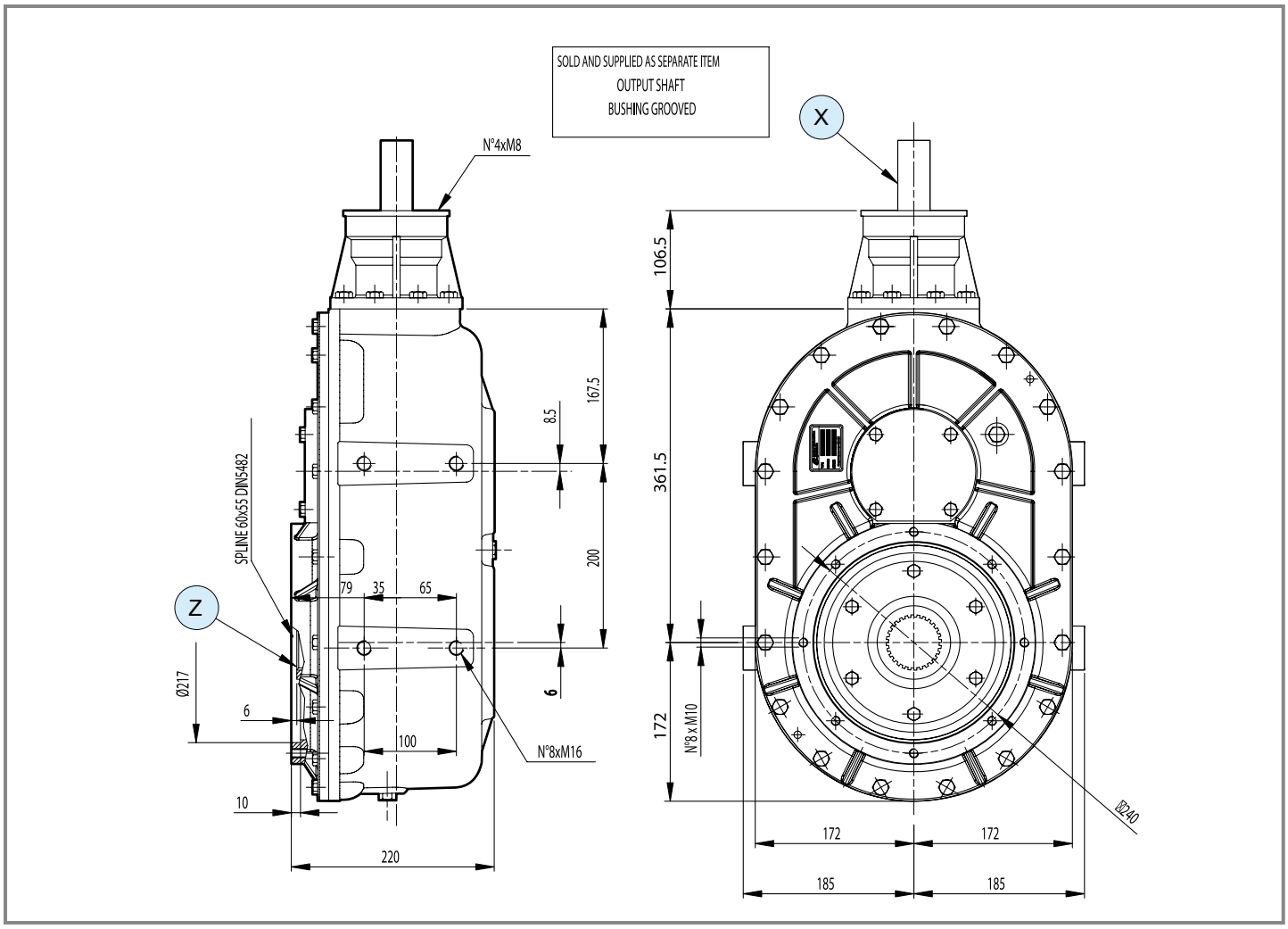

	i	N_1 [rpm]	P_1 [kW]	M_2 [Nm]	Shaft type X	Shaft type Y	Shaft type Z	Input	Features	Code	Mounting	
R	**10.80**	540	55.1	10206	1 1" 3/8 Z6	-	spline 60x55 DIN 5482	X	-	9.673.801	99 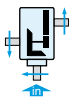	special
	15.00	540	33.0	8490	1 1" 3/8 Z6	-	spline 65x60 DIN 5482	X	-	9.673.802	99	special

comer industries

PGA-1202

Code **5717**

(4.06)

[kg] 180 | [l] 11

Per configurazioni non a catalogo contattare Servizio Tecnico-Commerciale
For non-catalog configurations contact Technical-Commercial Service

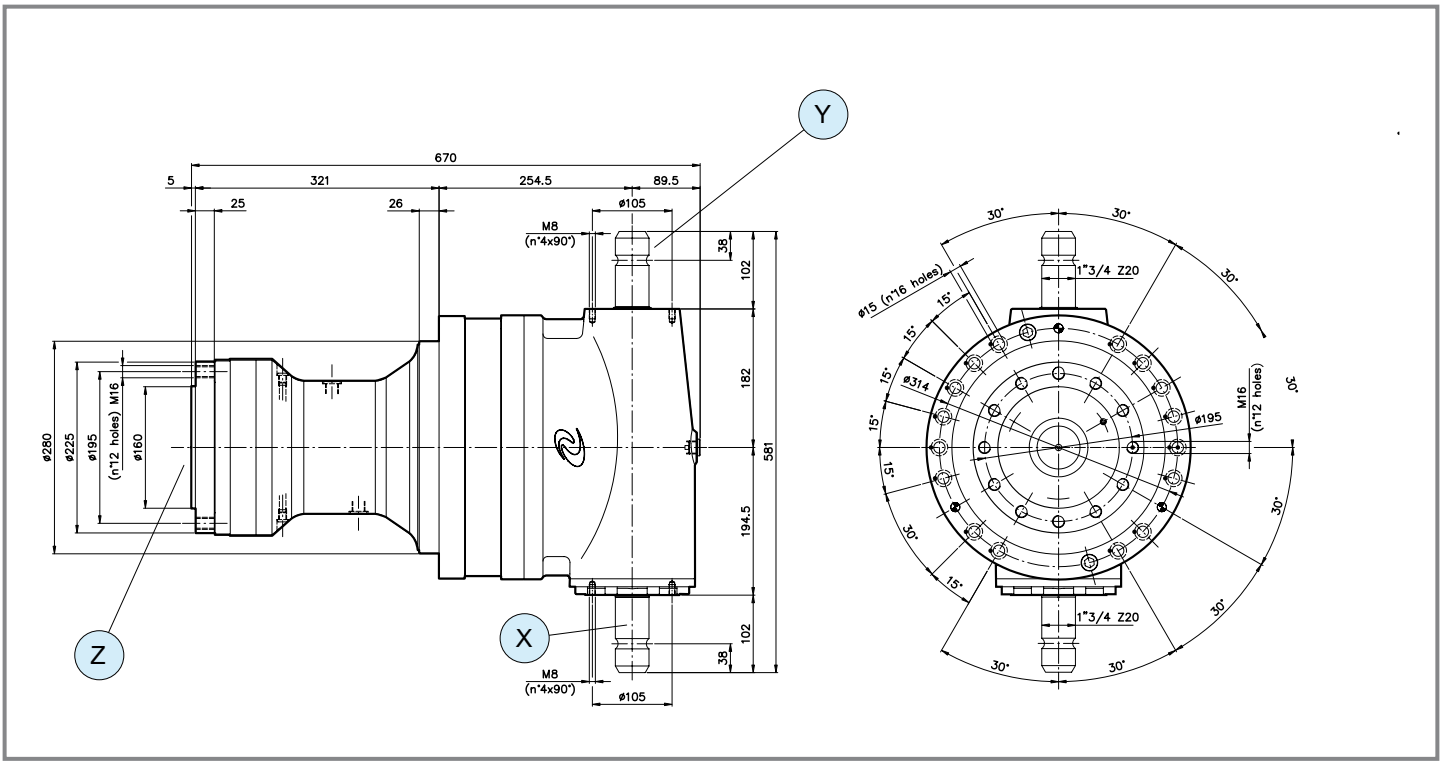

	i	N_1 [rpm]	M_2 [Nm]	Shaft type X	Shaft type Y	Shaft type Z	Input	Features	Code	Mounting	
R	**13.90**	540	12800	6 1"3/4 Z20	6 1"3/4 Z20		X	-	5717.000.8572.C	V37	std
R	**16.10**	540	11600	6 1"3/4 Z20	6 1"3/4 Z20		X	-	5717.000.8570.C	V37	std
R	**19.40**	540	8600	6 1"3/4 Z20	6 1"3/4 Z20		X	-	5717.000.8571.C	V37	std

PGA-1602

Code **5717**

(4.06)

[kg] 280 | [l] 15.5

Per configurazioni non a catalogo contattare Servizio Tecnico-Commerciale
For non-catalog configurations contact Technical-Commercial Service

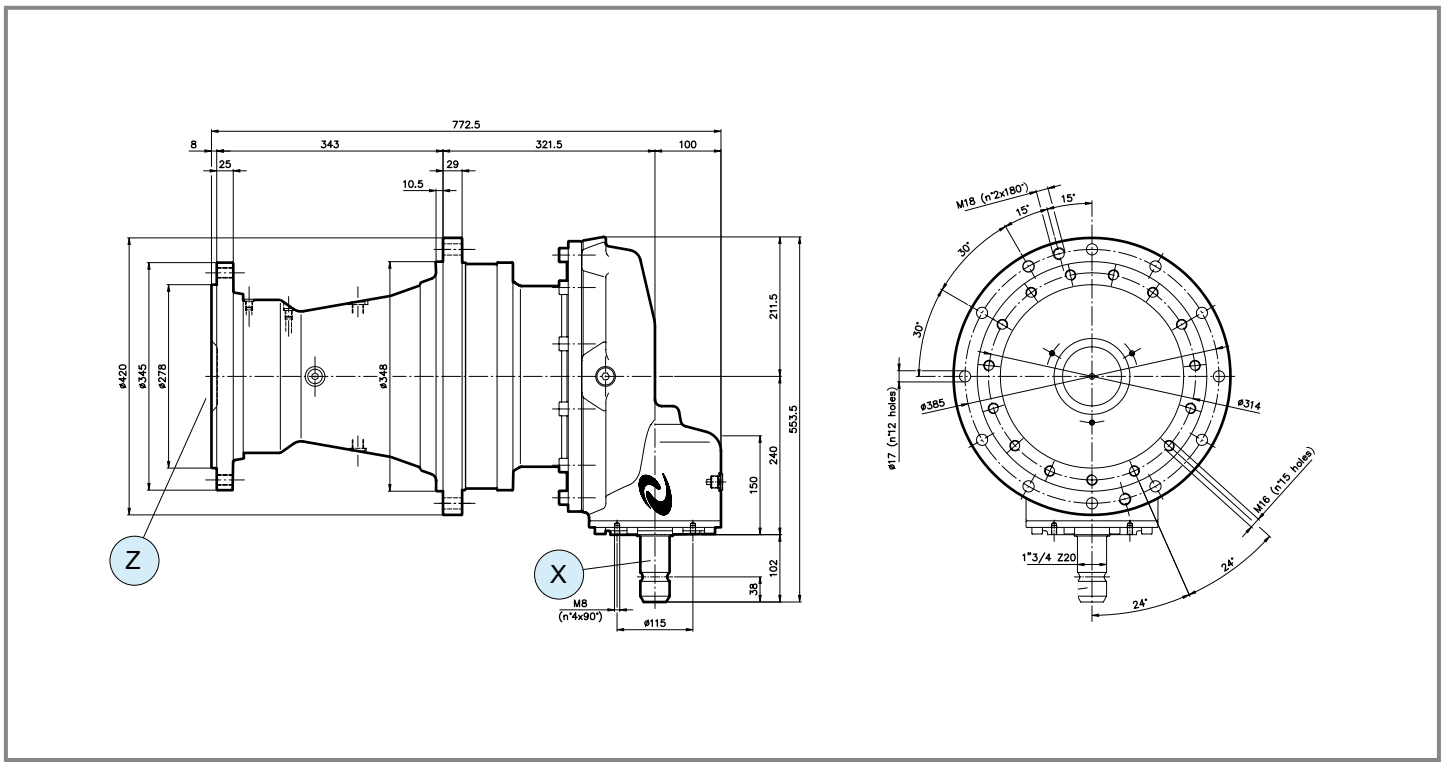

	i	N_1 [rpm]	M_2 [Nm]	Shaft type X	Shaft type Y	Shaft type Z	Input	Features	Code	Mounting	
R	**16.13**	540	15700	6 1"3/4 Z20	-		X	-	5717.004.8580.C	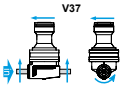 V37	std
	21.10	540	12010	6 1"3/4 Z20	-		X	-	5717.004.8581.C	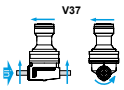 V37	std

comer industries

PGA-1602

Code **5717**

(4.06)

[kg] 265 | [l] 19.7

Per configurazioni non a catalogo contattare Servizio Tecnico-Commerciale
For non-catalog configurations contact Technical-Commercial Service

Versione doppio albero.
Double shaft version.

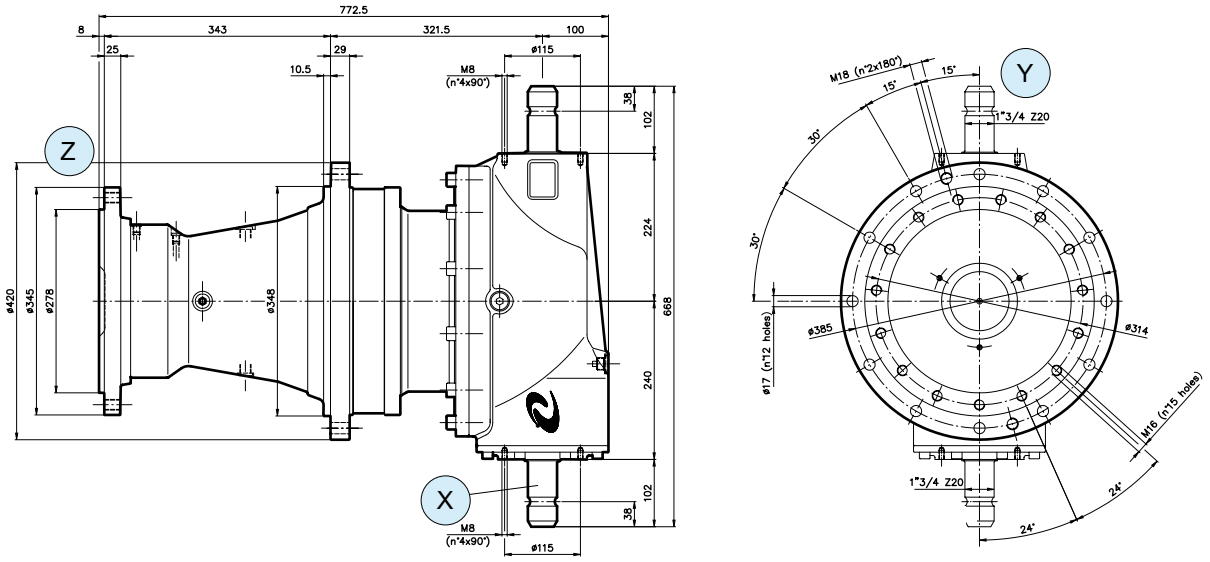

	i	N_1 [rpm]	M_2 [Nm]	Shaft type X	Shaft type Y	Shaft type Z	Input	Features	Code	Mounting	
	13.40	540	16500	6 1"3/4 Z20	6 1"3/4 Z20		X	-	5717.004.8550.C	V37 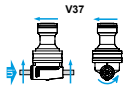	std
	15.10	540	17100	6 1"3/4 Z20	6 1"3/4 Z20		X	4 Satelliti *4 Planetary gear*	5717.004.8590.C	V37 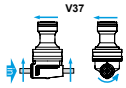	std
R	**16.13**	540	15700	6 1"3/4 Z20	6 1"3/4 Z20		X	-	5717.004.8541.C	V37 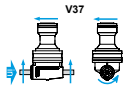	std
	18.20	540	13500	6 1"3/4 Z20	6 1"3/4 Z20		X	-	5717.004.8542.C	V37 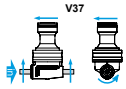	std
	21.10	540	12010	6 1"3/4 Z20	6 1"3/4 Z20		X	-	5717.004.8543.C	V37 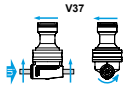	std

PGA-1603

Code **5717**

(4.06)

[kg]	270
[l]	19.7

Per configurazioni non a catalogo contattare Servizio Tecnico-Commerciale
For non-catalog configurations contact Technical-Commercial Service

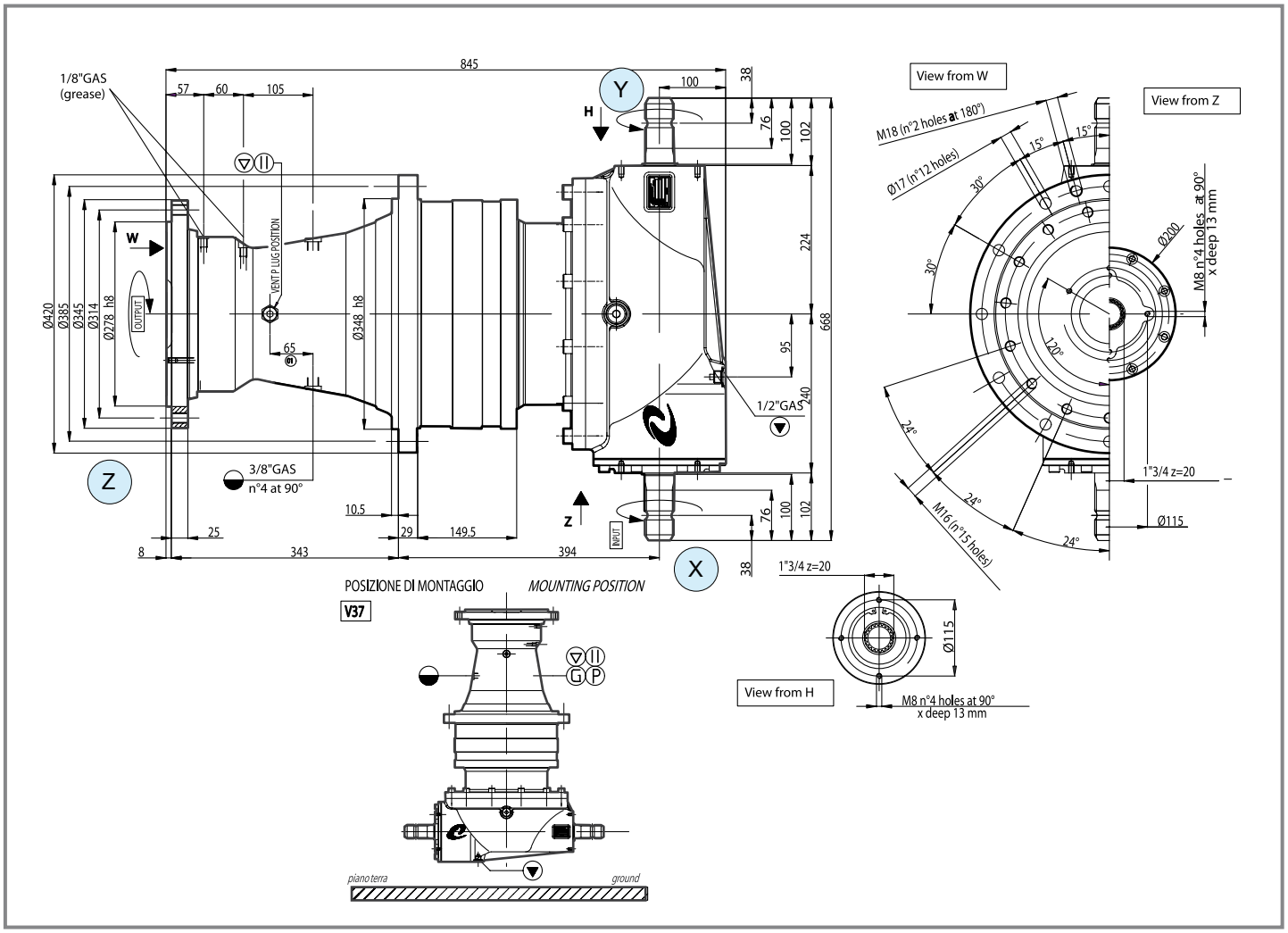

	i	N_1 [rpm]	M_2 [Nm]	Shaft type X	Shaft type Y	Shaft type Z	Input	Features	Code	Mounting	
R	**25.89**	540	20000	6 1"3/4 Z20	6 1"3/4 Z20		X	4 Satelliti *4 Planetary gear*	5717.004.8554.C	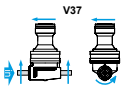 V37	std

comer industries

PGA-1603

Code **5717**

(4.06)

[kg] 303 | [l] -

Versione per attacco motore idraulico in entrata.
Version for input hydraulic motor

Per configurazioni non a catalogo contattare Servizio Tecnico-Commerciale
For non-catalog configurations contact Technical-Commercial Service

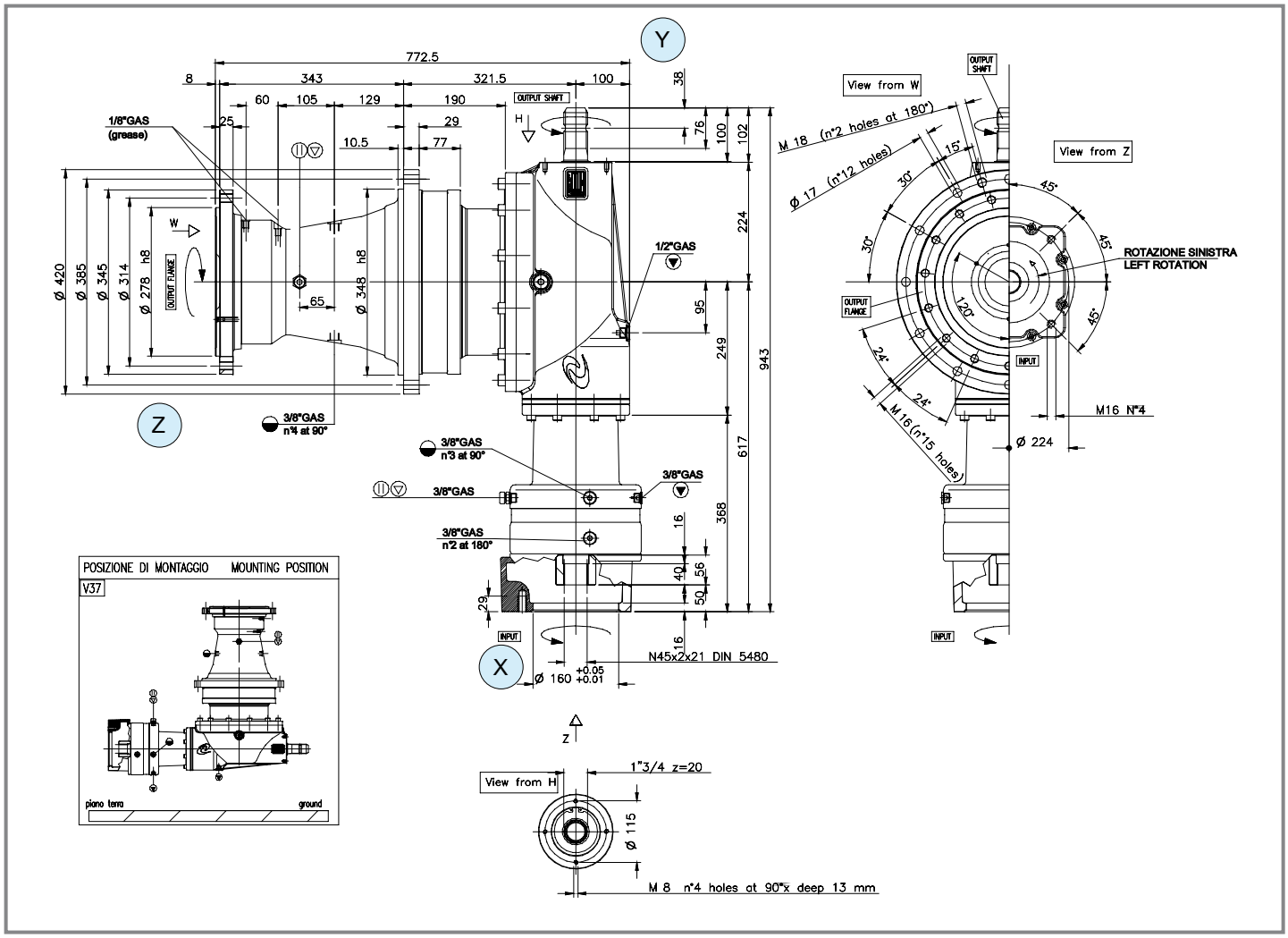

	i	N_1 [rpm]	M_2 [Nm]	Shaft type X	Shaft type Y	Shaft type Z	Input	Input flange	Code	Mounting	
R	**50.00**	3000	18020	72 16/32" DP Z27	6 1"3/4 Z20		X	SAE D 16/32 Z27	5717.000.0624	V37	special
	66.40	3000	14750	73 45x2x21 DIN5480	6 1"3/4 Z20		X	Sauer H1B	5717.000.0602	V37	special
	66.40	3000	14750	75 16/32" DP Z23	6 1"3/4 Z20		X	SAE C 16/32 Z23	5717.000.0610	V37	special
	83.26	3000	14750	74 16/32" DP Z21	6 1"3/4 Z20		X	SAE C 16/32 Z21	5717.000.0619	V37	special

PGA-2102 | PGA-2103

Code **5817** | Code **5817**

(4.06)

kg [kg]	270	OIL [l]	19.7
kg [kg]	265	OIL [l]	19.7

Per configurazioni non a catalogo contattare Servizio Tecnico-Commerciale
For non-catalog configurations contact Technical-Commercial Service

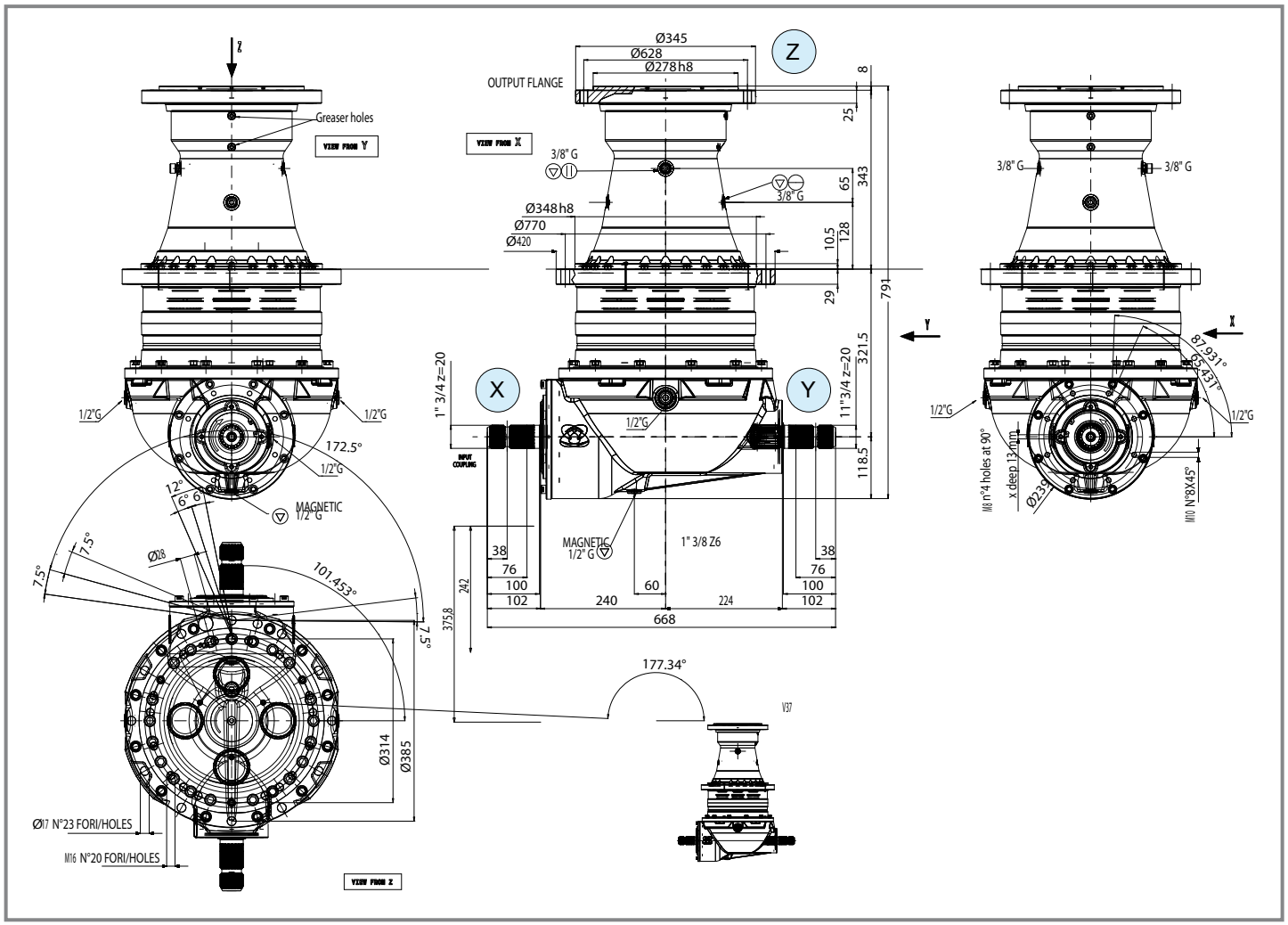

		i	N_1 [rpm]	M_2 [Nm]	Shaft type X	Shaft type Y	Shaft type Z	Input	Features	Code	Mounting	
PGA 2102		**17.45**	540	21000	6 1"3/4 Z20	6 1"3/4 Z20		X	2 Stadi *2 Stages*	5817.004.8002	V37	std
PGA 2102	R	**13.56**	540	21000	6 1"3/4 Z20	6 1"3/4 Z20		X	2 Stadi *2 Stages*	5817.004.8003	V37	std
PGA 2102		**16.00**	540	21000	6 1"3/4 Z20	6 1"3/4 Z20		X	2 Stadi *2 Stages*	5817.004.8004	V37	std
PGA 2103	R	**21.10**	540	21000	6 1"3/4 Z20	6 1"3/4 Z20		X	3 Stadi *3 Stages*	5817.004.8007	V37	std
PGA 2103		**23.30**	540	21000	6 1"3/4 Z20	6 1"3/4 Z20		X	3 Stadi *3 Stages*	5817.004.8009	V37	std

PGA-2502

Code **5718**

(4.06)

kg [kg]	420	OIL [l]	-

Per configurazioni non a catalogo contattare Servizio Tecnico-Commerciale
For non-catalog configurations contact Technical-Commercial Service

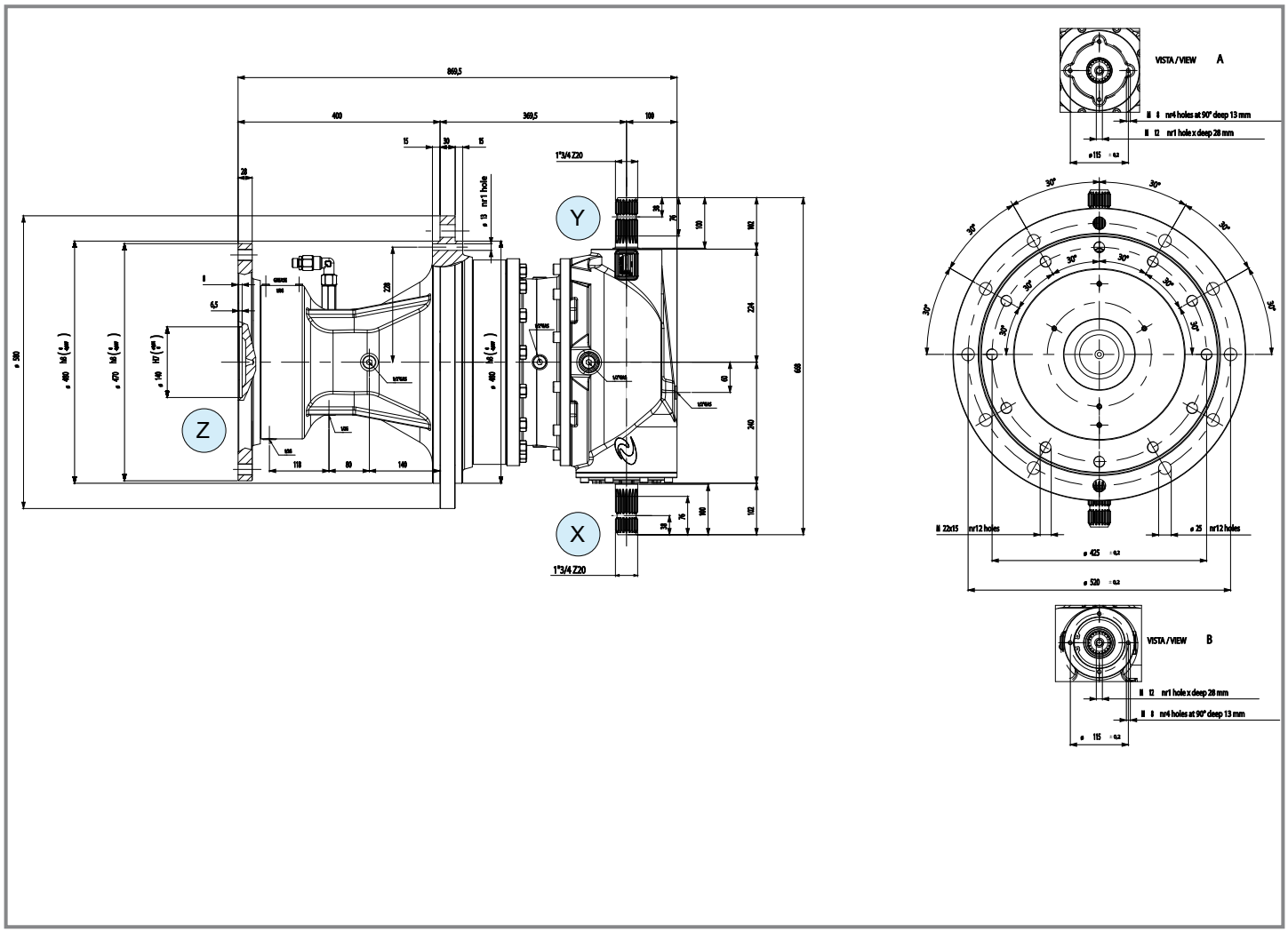

	i	N_1 [rpm]	M_2 [Nm]	Shaft type X	Shaft type Y	Shaft type Z	Input	Features	Code	Mounting	
R	**13.60**	540	23780	6 1"3/4 Z20	6 1"3/4 Z20		X	CW input	5718.000.0539	V38	std
R	**15.20**	540	22000	6 1"3/4 Z20	6 1"3/4 Z20		X	-	5718.000.0533	V37	std
R	**19.60**	540	21000	6 1"3/4 Z20	6 1"3/4 Z20		X	-	5718.000.0530	V37	std

PGA-2503

Code **5718**

(4.06)

[kg] [l]

Per configurazioni non a catalogo contattare Servizio Tecnico-Commerciale
For non-catalog configurations contact Technical-Commercial Service

Versione per attacco motore idraulico in entrata.
Version for input hydraulic motor

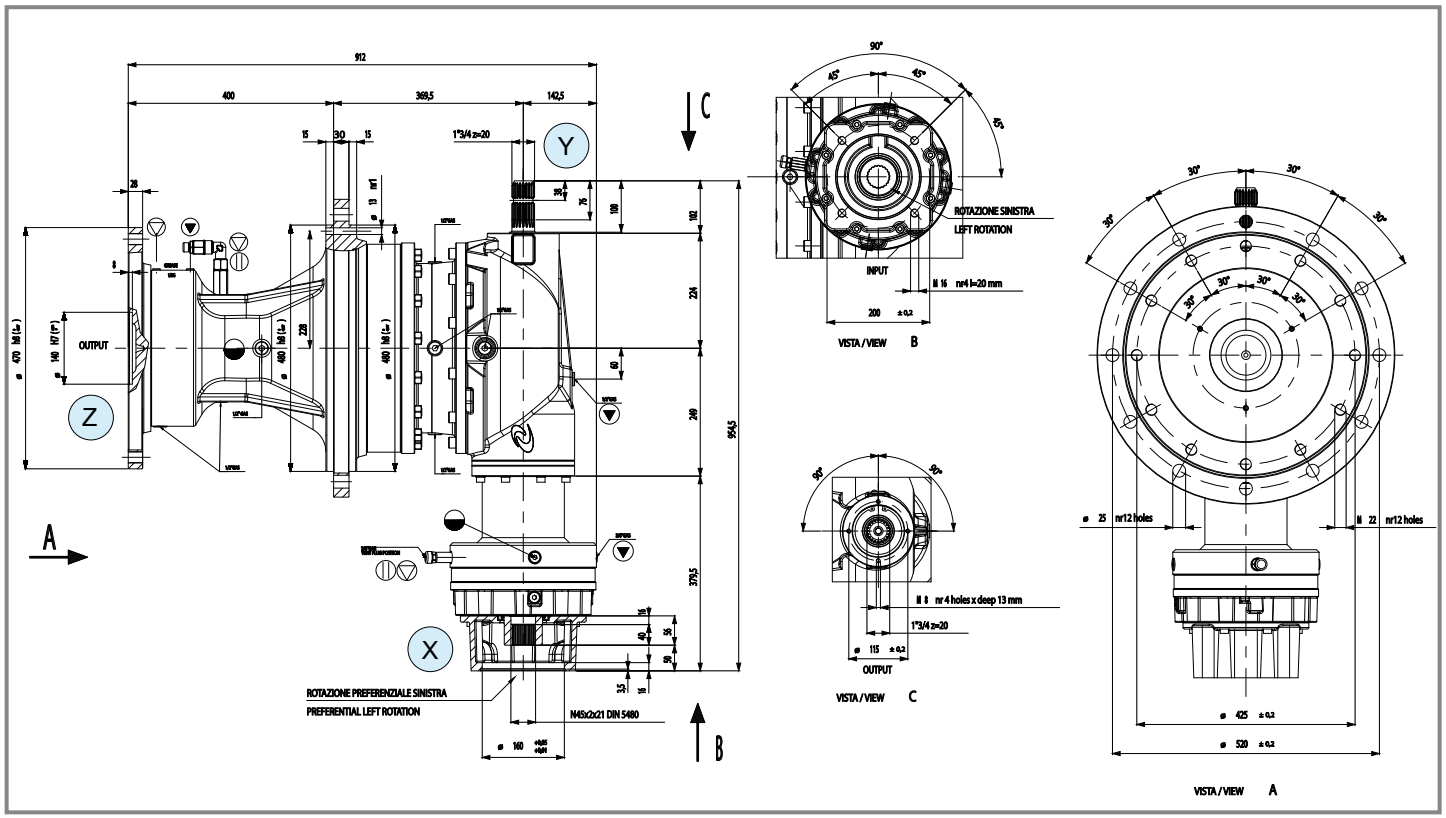

	i	N_1 [rpm]	M_2 [Nm]	Shaft type X	Shaft type Y	Shaft type Z	Input flange	Features	Code	Mounting	
R	**72.00**	540	23780	73 45x2x21 DIN5480	6 1"3/4 Z20		X	SAE C / REXROTH A2FM160	5718.000.0531	V37	special
R	**86.65**	3000	20000	73 45x2x21 DIN5480	6 1"3/4 Z20		X	SAE C / Sauer H1B	5718.000.0532	V37	special
	86.65	3000	20000	72 16/32" DP Z27	6 1"3/4 Z20		X	SAE D	5718.000.0535	V37	special

comer industries

PGA-3003

Code **5718**

(4.06)

[kg]	-	[l]	-

Per configurazioni non a catalogo contattare Servizio Tecnico-Commerciale
For non-catalog configurations contact Technical-Commercial Service

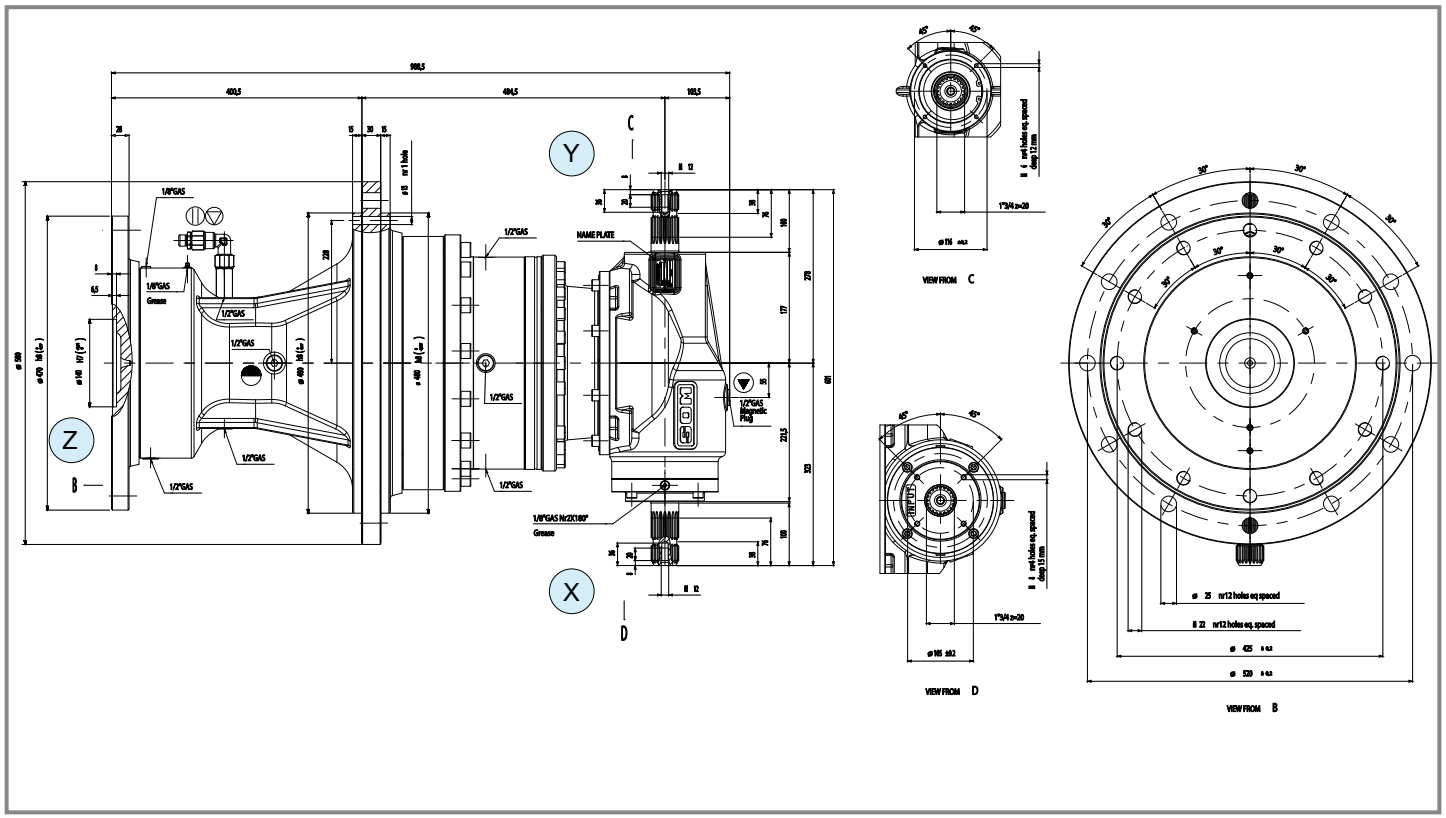

	i	N_1 [rpm]	M_2 [Nm]	Shaft type X	Shaft type Y	Shaft type Z	Input	Features	Code	Mounting	
R	**29.34**	540	30760	6 1"3/4 Z20	6 1"3/4 Z20		X	-	5718.800.0564	V37	special
	35.40	540	30760	6 1"3/4 Z20	6 1"3/4 Z20		X	-	5718.800.0563	V37	special

PGA-4203

Code **5724**

(4.06)

[kg] 587 | [l] -

Per configurazioni non a catalogo contattare Servizio Tecnico-Commerciale
For non-catalog configurations contact Technical-Commercial Service

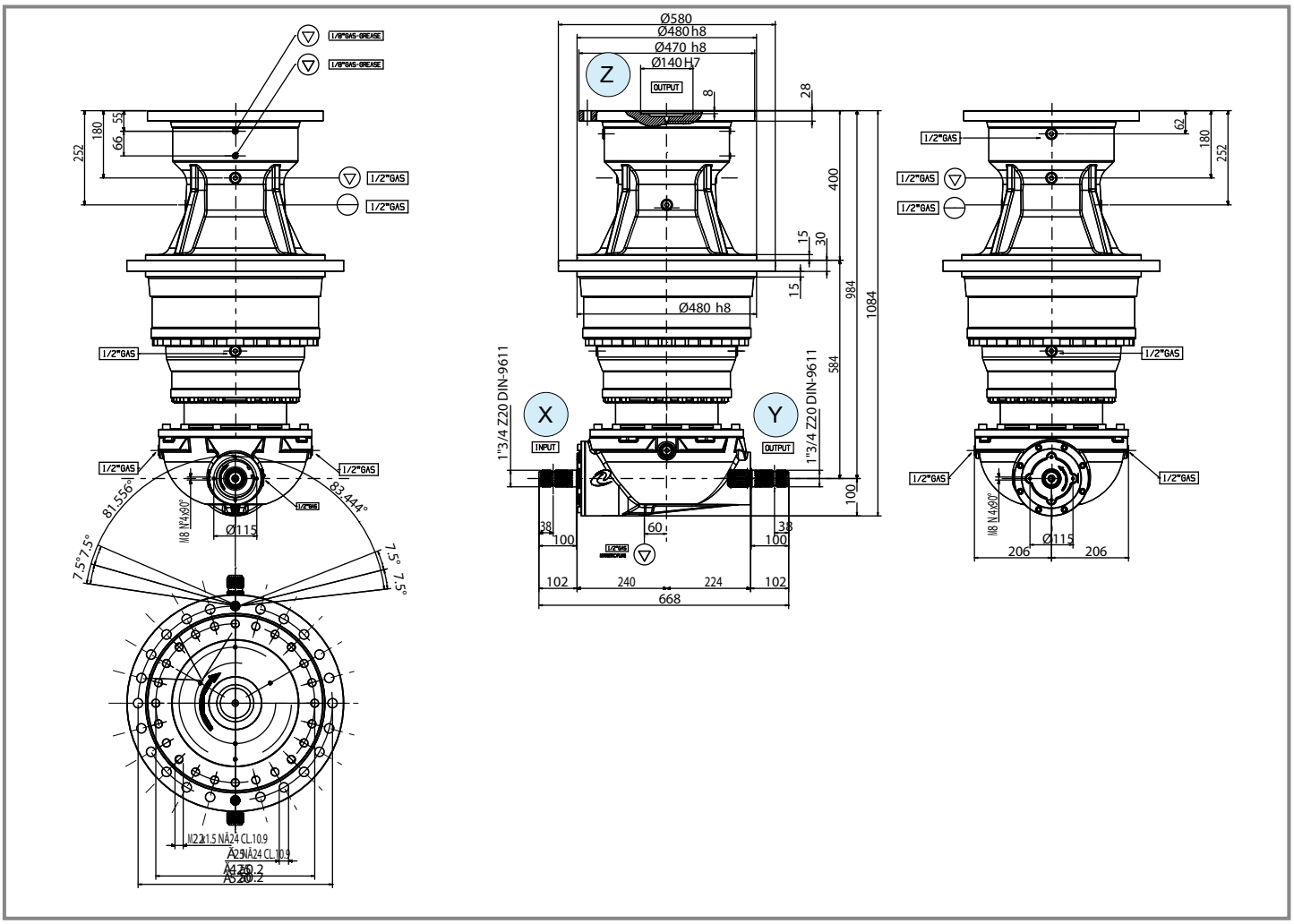

	i	N_1 [rpm]	M_2 [Nm]	Shaft type X	Shaft type Y	Shaft type Z	Input	Features	Code	Mounting	
R	**31.60**	1000	142000	6 1"3/4 Z20	6 1"3/4 Z20		X	-	5724.004.0001	V37	special

comer industries

D-732A

Code **732**

(4.09)

[kg] 62 | [l] 5.6

Per configurazioni non a catalogo contattare Servizio Tecnico-Commerciale
For non-catalog configurations contact Technical-Commercial Service

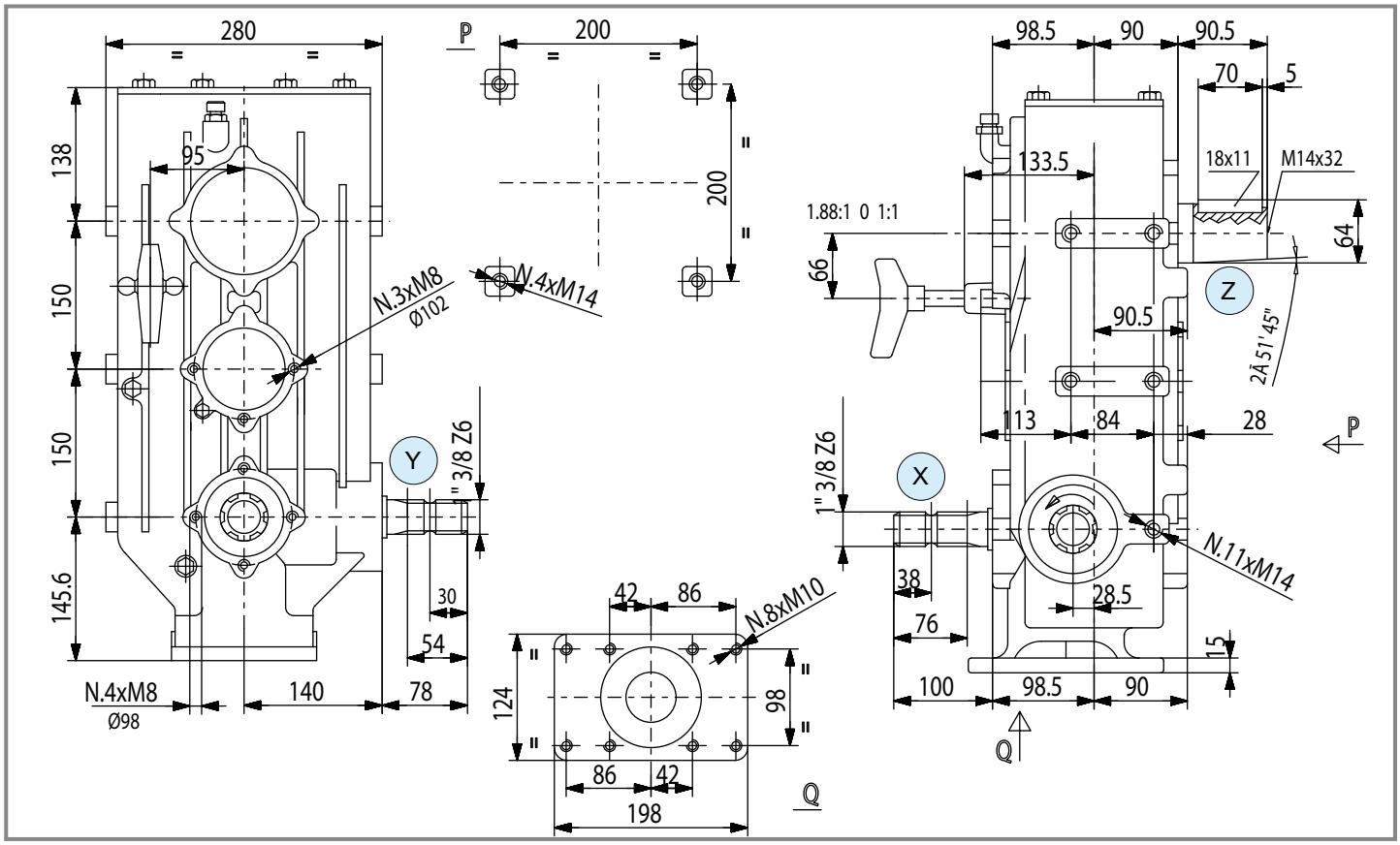

	i	N_1 [rpm]	M_2 [Nm]	Shaft type X	Shaft type Y	Shaft type Z	Input	Output	Features	Code	Mounting	
				1 - Ruota libera / *Free wheel*								
R	1.00 1.88	540	91.9	1 1" 3/8 Z6	1 1" 3/8 Z6	71 64	X	A.P. GR3	-	9.732.338	-	std
	1.00 1.93	540	59.0	1 1" 3/8 Z6	-	70 L 90.5 ø 57	X	-	-	9.732.001	-	std
	1.00 1.93	540	59.0	1 1" 3/8 Z6	-	71 64	X	-	1 ccw	9.732.316	-	std
	1.00 1.93	540	59.0	1 1" 3/8 Z6	1 1" 3/8 Z6	71 64	X	A.P. GR3	-	9.732.377	-	std
	1.00 1.93	540	91.9	1 1" 3/8 Z6	1 1" 3/8 Z6	71 64	X	A.P. GR3	-	9.732.341	-	std
	1.00 1.93	540	59.0	1 1" 3/8 Z6	-	71 64	X	-	1 ccw	9.732.003	-	std

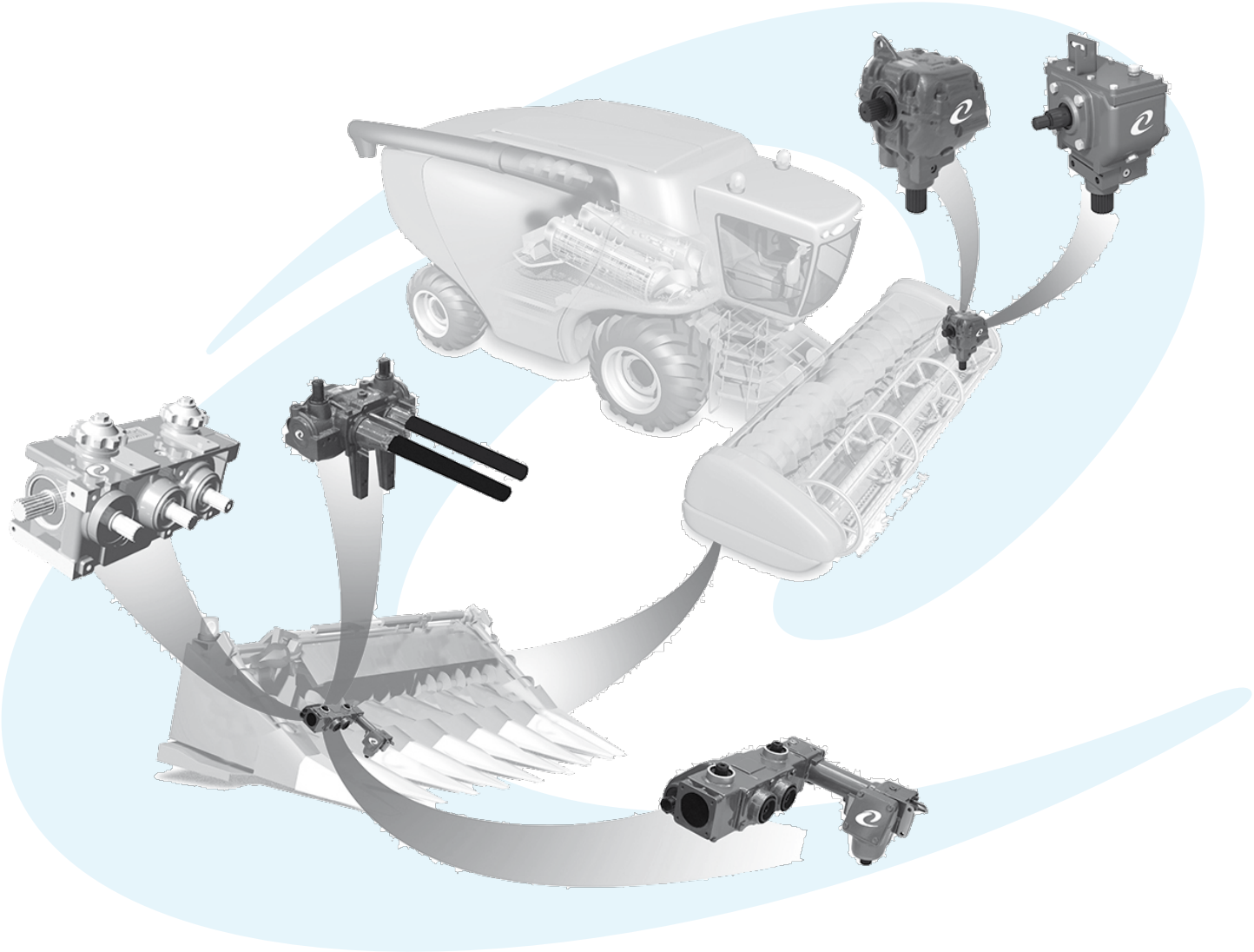

Per configurazioni non a catalogo contattare Servizio Tecnico-Commerciale
For non-catalog configurations contact Technical-Commercial Service

	i	$P_{1\text{ - max}}$ [kW]	$M_{2\text{ - max}}$ [Nm]	Tipologia alberi disponibili *Available type of shafts*	p.
L-170B	M ⇨ + ⇨ -	11.0	-	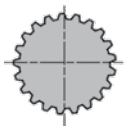	240
	- ⇨ = ⇨ -				
	R + ⇨ -				
N-669J	M ⇨ + ⇨ 0.51/1.21	11.7	-	-	241
	- ⇨ = ⇨ -				
	R + ⇨ -				
T-304A	M ⇨ + ⇨ 1.50	36.7	604	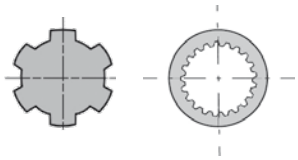	242
	- ⇨ = ⇨ -				
	R + ⇨ 1.41÷1.93				
M-767A	M ⇨ + ⇨ 1.60	44.1	473	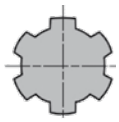	243
	- ⇨ = ⇨ -				
	R + ⇨ -				

L-170B

Code **170**

(4.08)

[kg]	50	[l]	-

Per configurazioni non a catalogo contattare Servizio Tecnico-Commerciale
For non-catalog configurations contact Technical-Commercial Service

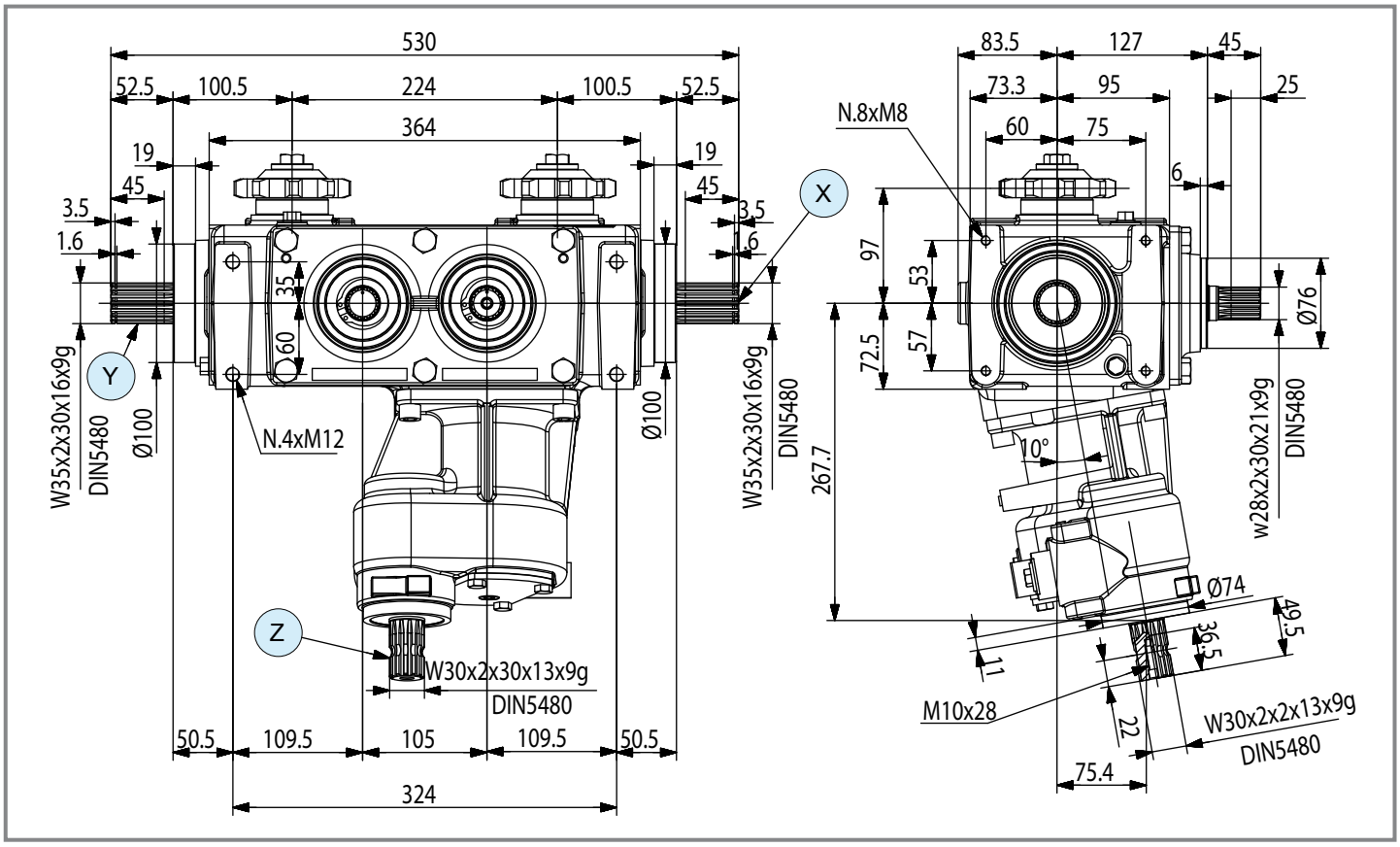

	i	N_1 [rpm]	P_1 [kW]	M_2 [Nm]	Shaft type X	Shaft type Y	Shaft type Z	Input	Features	Code	Mounting	
	-	580	11.0	-	70 35x31 DIN5482	71 28x25 DIN5482	72 30x27 DIN5482	X	-	9.170.160	21 22	std
M	-	580	11.0	-	70 35x31 DIN5482	71 28x25 DIN5482	72 30x27 DIN5482	X	SX	9.170.161	21 22	std
	-	580	11.0	-	70 35x31 DIN5482	71 28x25 DIN5482	72 30x27 DIN5482	X	DX	9.170.162	21 22	std

N-669J

Code **669.8**

(4.08)

[kg] 34.5 | [l] -

Per configurazioni non a catalogo contattare Servizio Tecnico-Commerciale
For non-catalog configurations contact Technical-Commercial Service

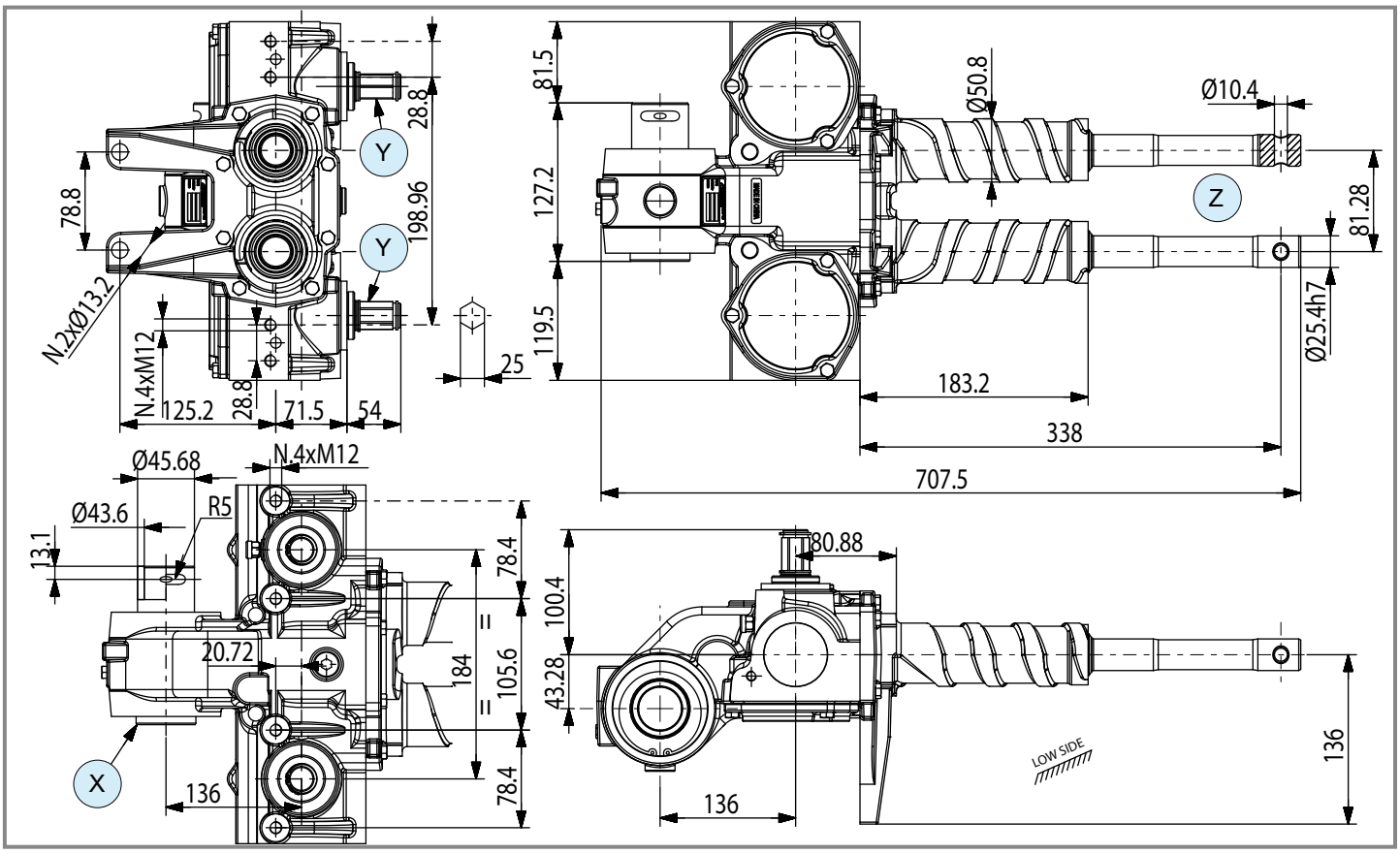

	i	N_1 [rpm]	P_1 [kW]	M_2 [Nm]	Shaft type X	Shaft type Y	Shaft type Z	Input	Features	Code	Mounting	
M	**1:1.21** **1.91:1**	781	11.7	-	-	-	-	-	Ghisa *Cast Iron Hausing*	9.669.808	-	std
M	**1:1.21** **1.91:1**	781	11.7	-	-	-	-	-	Alluminio *Aluminium Hausing*	9.669.811	-	std

T-304A

Code **304**

(4.08)

[kg] 19 | [l] -

Per configurazioni non a catalogo contattare Servizio Tecnico-Commerciale
For non-catalog configurations contact Technical-Commercial Service

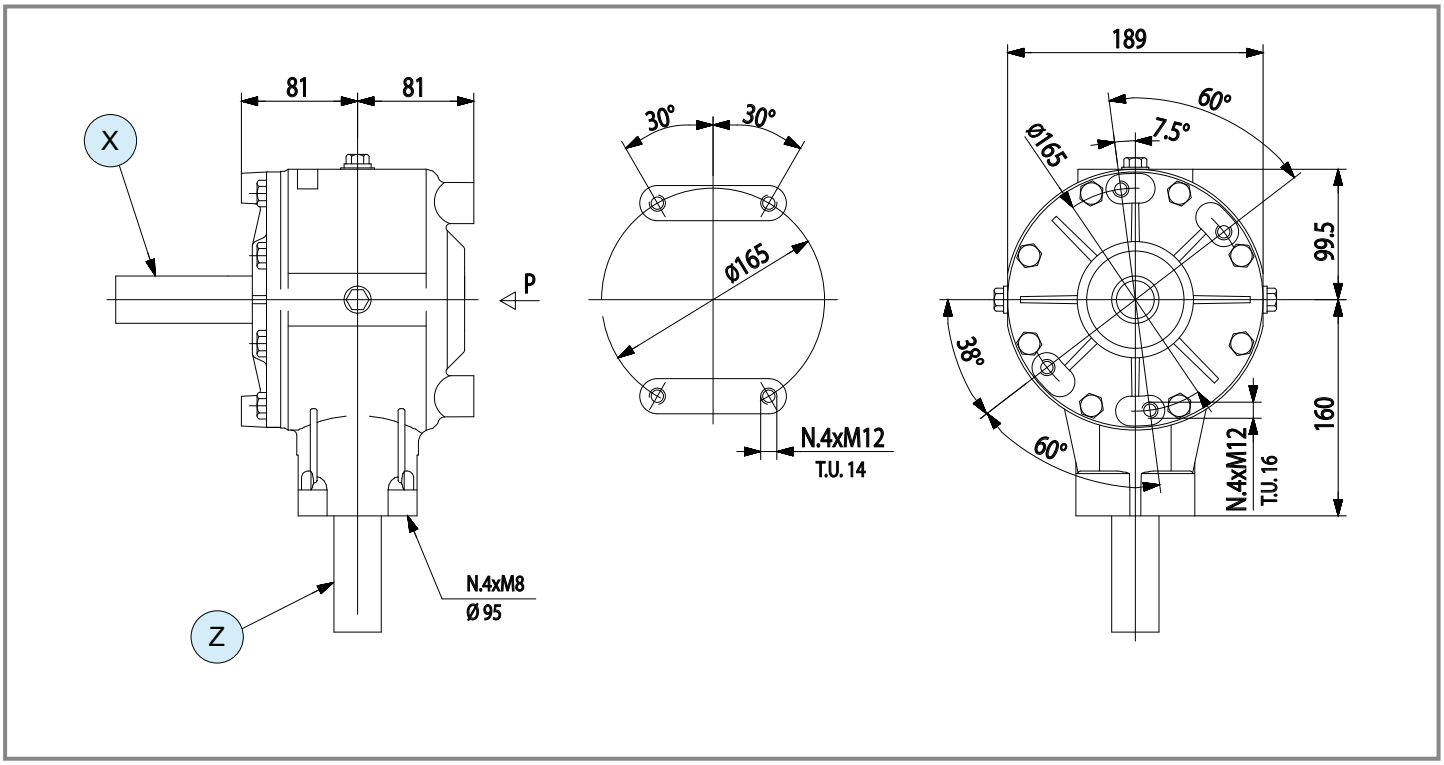

	i	N_1 [rpm]	P_1 [kW]	M_2 [Nm]	Shaft type X	Shaft type Y	Shaft type Z	Input	Features	Code	Mounting	
M	**1.50**	750	36.7	302	1 — 1" 3/8 Z6	-	1 — 1" 3/8 Z6	X	-	9.304.519	21 22	std
R	**1.41**	830	36.7	577	64 — 35x31 DIN5482	-	1 — 1" 3/8 Z6	Z	-	9.304.524	3 4	std
R	**1.50**	900	36.7	567	64 — 35x31 DIN5482	-	1 — 1" 3/8 Z6	Z	-	9.304.514	3 4	std
R	**1.60**	900	36.7	604	64 — 35x31 DIN5482	-	1 — 1" 3/8 Z6	Z	-	9.304.515	3 4	std
R	**1.93**	1100	36.7	596	64 — 35x31 DIN5482	-	1 — 1" 3/8 Z6	Z	-	9.304.517	3 4	std

M-767A

Code **767**

(4.08)

[kg]	35.7	[l]	-

Per configurazioni non a catalogo contattare Servizio Tecnico-Commerciale
For non-catalog configurations contact Technical-Commercial Service

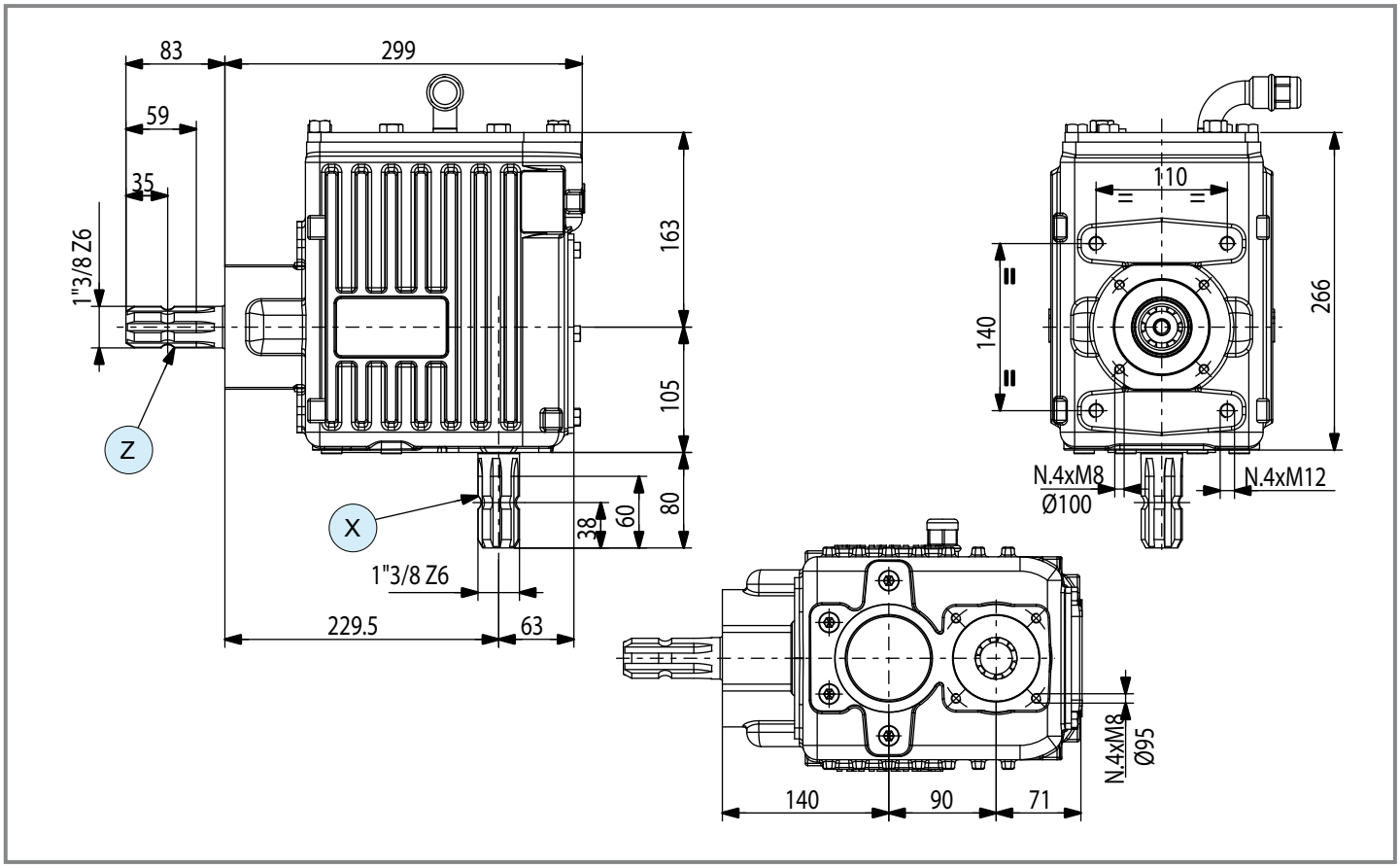

	i	N_1 [rpm]	P_1 [kW]	M_2 [Nm]	Shaft type X	Shaft type Y	Shaft type Z	Input	Features	Code	Mounting	
M ⇨ +	**1.60**	540	44.1	473	1 1" 3/8 Z6	-	1 1" 3/8 Z6	Z	-	9.767.000	-	special

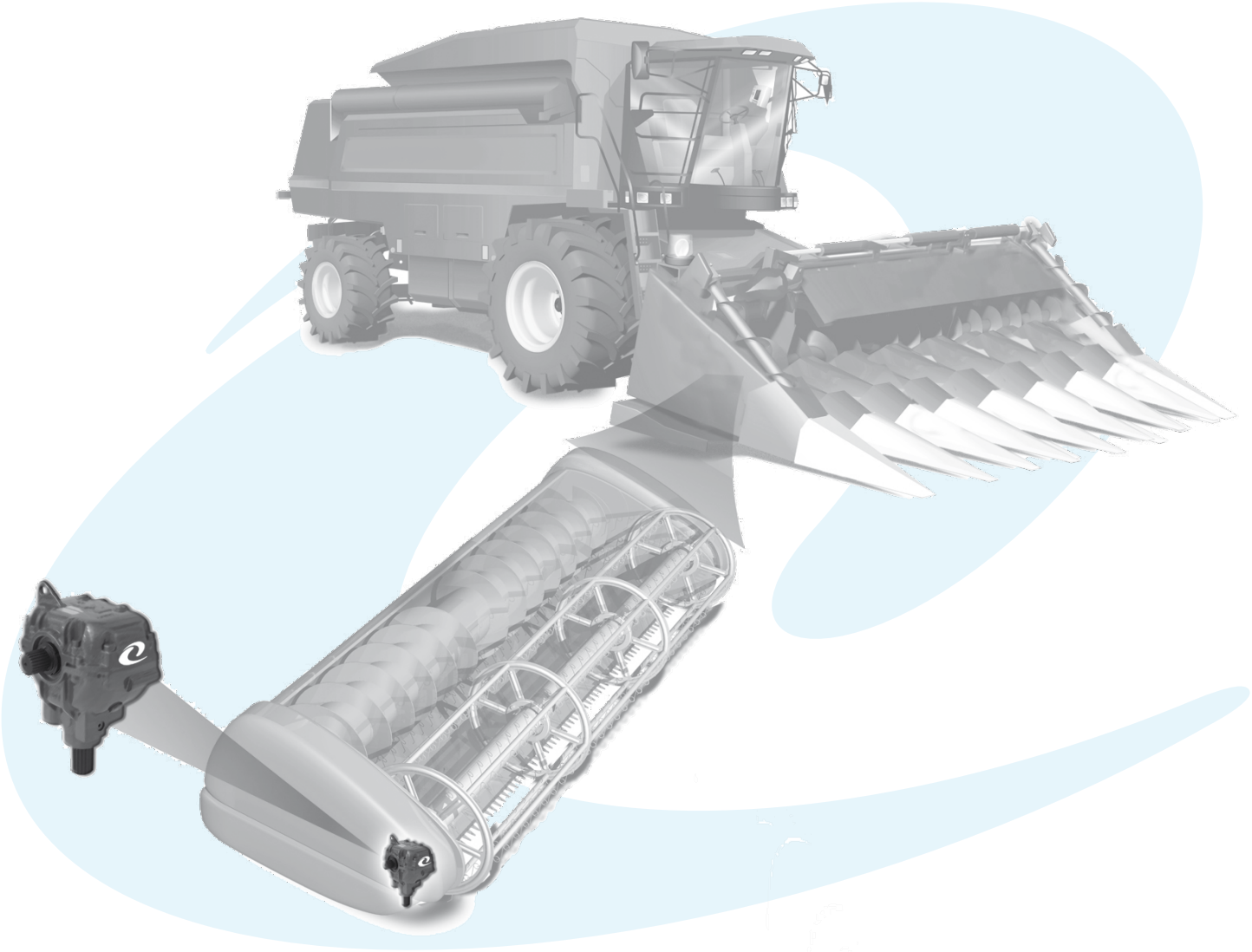

Per configurazioni non a catalogo contattare Servizio Tecnico-Commerciale
For non-catalog configurations contact Technical-Commercial Service

	i	$M_{2\text{ - max}}$ [Nm]	Tipologia alberi disponibili *Available type of shafts*	p.
OS-784	-	-	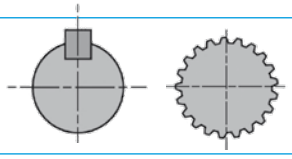	246
OS-861	-	-	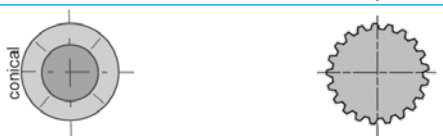	247
LF-153A	M ⇨ + 2.80	75		248

OS-784

Code **784**

(4.10)

[kg] 21 | [l] -

Per configurazioni non a catalogo contattare Servizio Tecnico-Commerciale
For non-catalog configurations contact Technical-Commercial Service

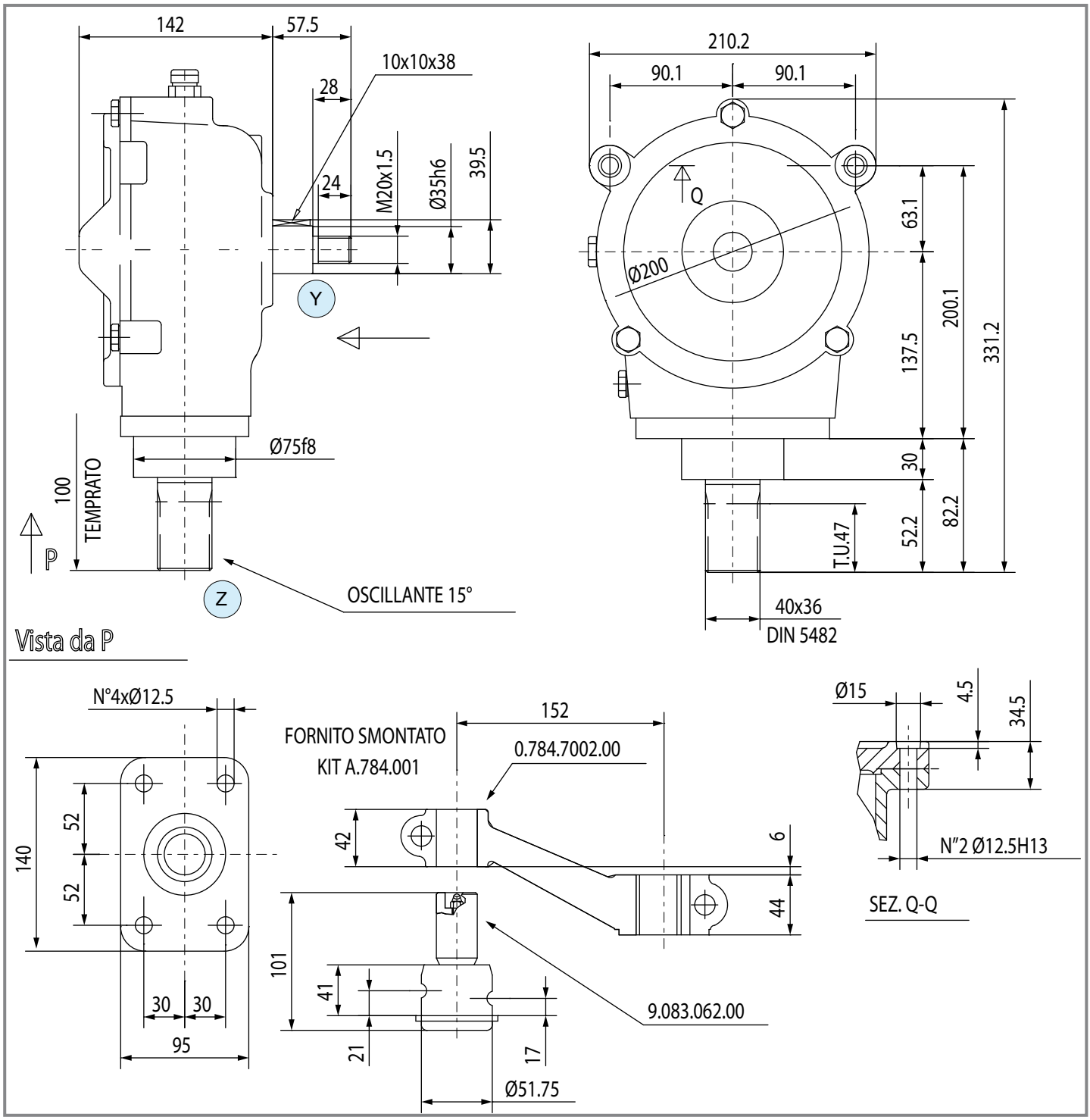

	i	N_1 [rpm]	P_1 [kW]	M_2 [Nm]	Shaft type X	Shaft type Y	Shaft type Z	Input	Features	Code	Mounting	
	-	550÷600	-	-	-	L 28 ø 35	56 40x36 DIN5482	Y	-	9.784.000	-	special

comer industries

OS-861

Code **861**

(4.10)

[kg] 26 | [l] -

Per configurazioni non a catalogo contattare Servizio Tecnico-Commerciale
For non-catalog configurations contact Technical-Commercial Service

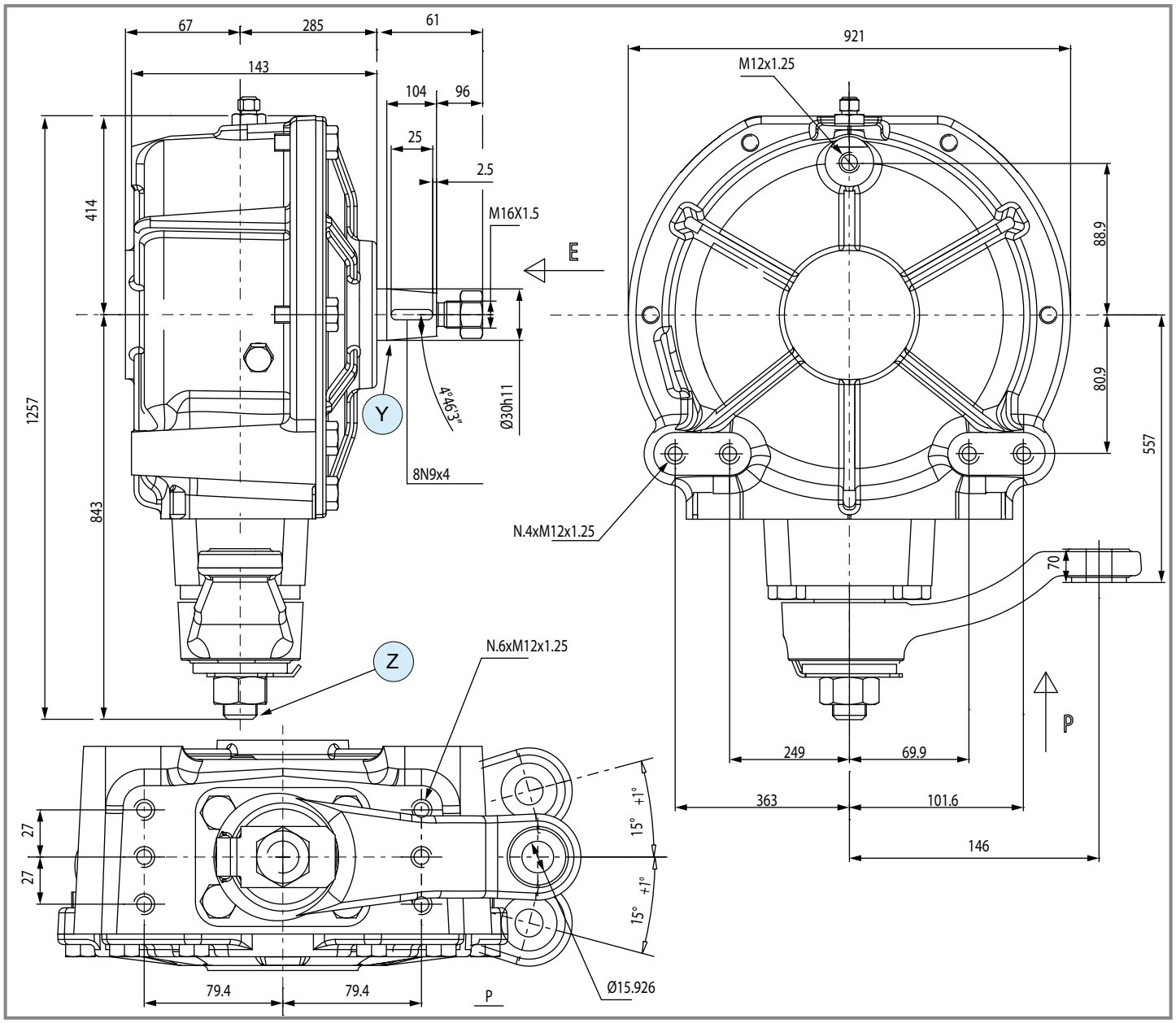

	i	N_1 [rpm]	P_1 [kW]	M_2 [Nm]	Shaft type X	Shaft type Y	Shaft type Z	Input	Features	Code	Mounting	
	-	550÷600	-	-	-	54 30	56 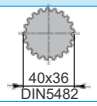 40x36 DIN5482	Y	-	9.861.001	-	special

LF-153A

(4.10)

Code **153**

[kg] 12 | [l]

Per configurazioni non a catalogo contattare Servizio Tecnico-Commerciale
For non-catalog configurations contact Technical-Commercial Service

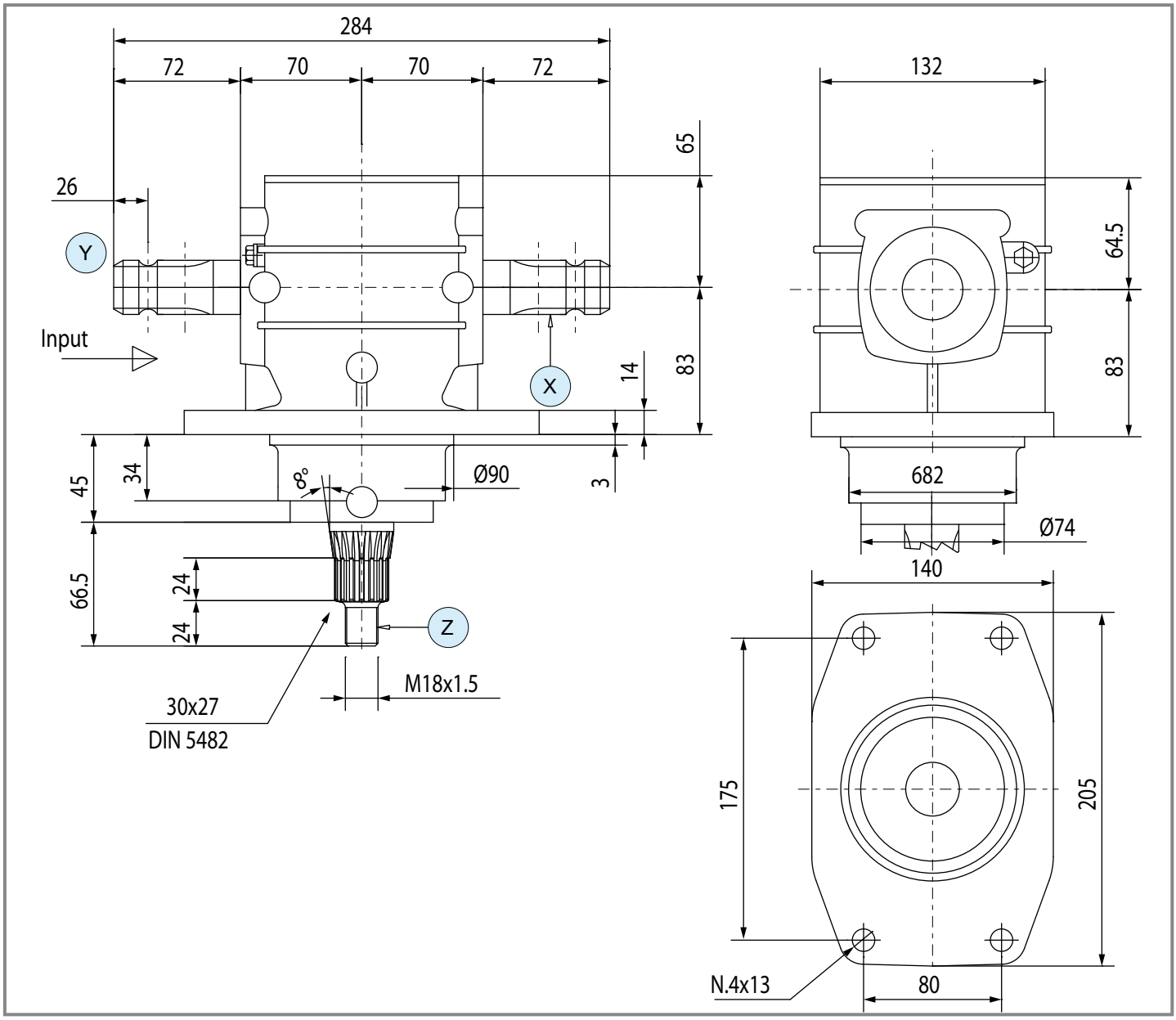

	i	N_1 [rpm]	P_1 [kW]	M_2 [Nm]	Shaft type X	Shaft type Y	Shaft type Z	Input	Features	Code	Mounting	
M	**2.80**	900	11.0	40	1 — 1" 3/8 Z6	1 — 1" 3/8 Z6	57 — 30x27 DIN5482	Y		9.153.209	27 28	special
	2.80	900	20.5	75	1 — 1" 3/8 Z6	1 — 1" 3/8 Z6	58 — 30x2x30x13x9g DIN5480	Y		9.153.210	27 28	special

Questa pagina è lasciata intenzionalmente bianca
This page is intentionally left blank

(5.01) Gruppi elettrogeni / *P.T.O. generators*

(5.02) Seghe circolari - a nastro/ *Circular saws - Belt saws*

Per configurazioni non a catalogo contattare Servizio Tecnico-Commerciale
For non-catalog configurations contact Technical-Commercial Service

	i	$M_{2\text{ - max}}$ [Nm]	Tipologia alberi disponibili *Available type of shafts*	p.
A-1B	M 7.0	30	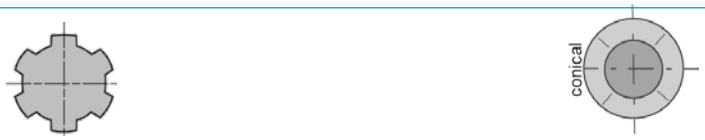	252
A-624B	M 3.5÷6.9	185	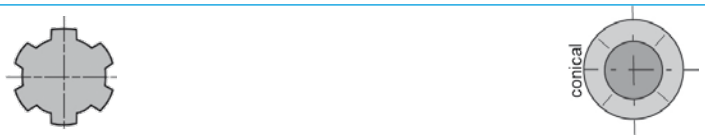	253
A-624C	M 3.5÷6.9	247	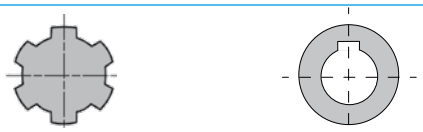	254
A-624E	M 3.5÷6.9	185	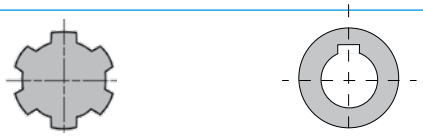	255
A-4F	M 3.8	340	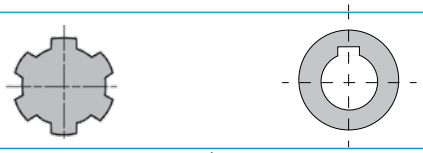	256
L-25A	M 1.9÷2.78	99	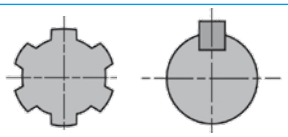	257
T-19G	M 1.85	115	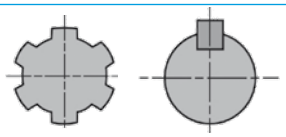	258
T-27A	M 1.92	195	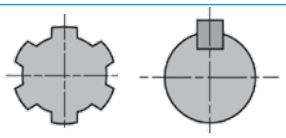	259
L-154J	R 7.75	2526	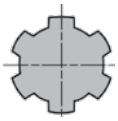	260
N-673J	R 10.80	10206	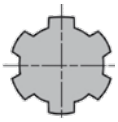	261

A-1B

Code **600**

(5.01)

[kg] 11 | [l] 0.5

Per configurazioni non a catalogo contattare Servizio Tecnico-Commerciale
For non-catalog configurations contact Technical-Commercial Service

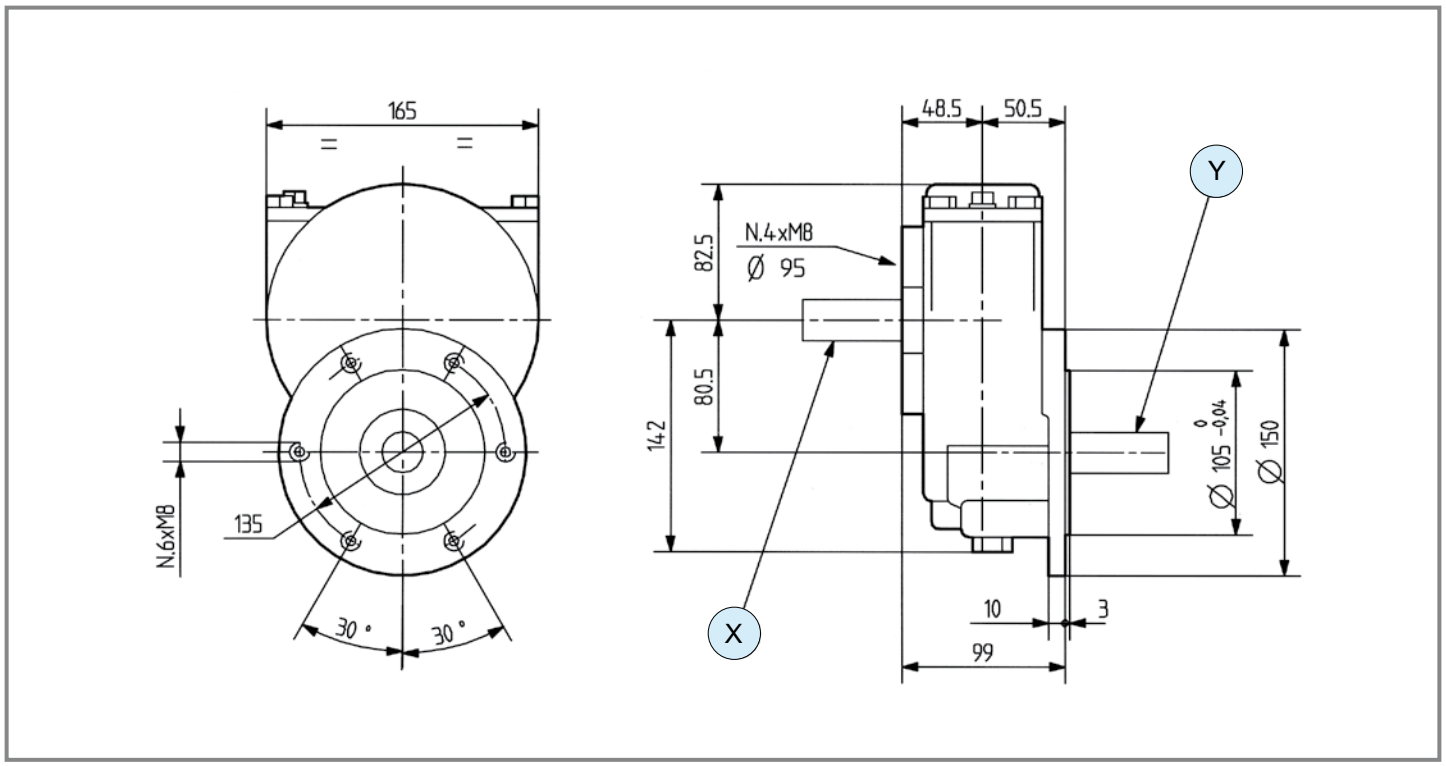

	i	N_1 [rpm]	P_1 [kW]	M_2 [Nm]	rpm Altern.	KVA	Shaft type X	Shaft type Y	Input	Flange type	Code	Mounting	
M	**7.00**	429	9.6	30	3000	8	1 1" 3/8 Z6	53 23	X	-	9.600.005	207 208 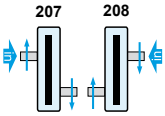	std

comer industries

A-624B

Code **624**

(5.01)

[kg] 17 | [l] 0.45

Per configurazioni non a catalogo contattare Servizio Tecnico-Commerciale
For non-catalog configurations contact Technical-Commercial Service

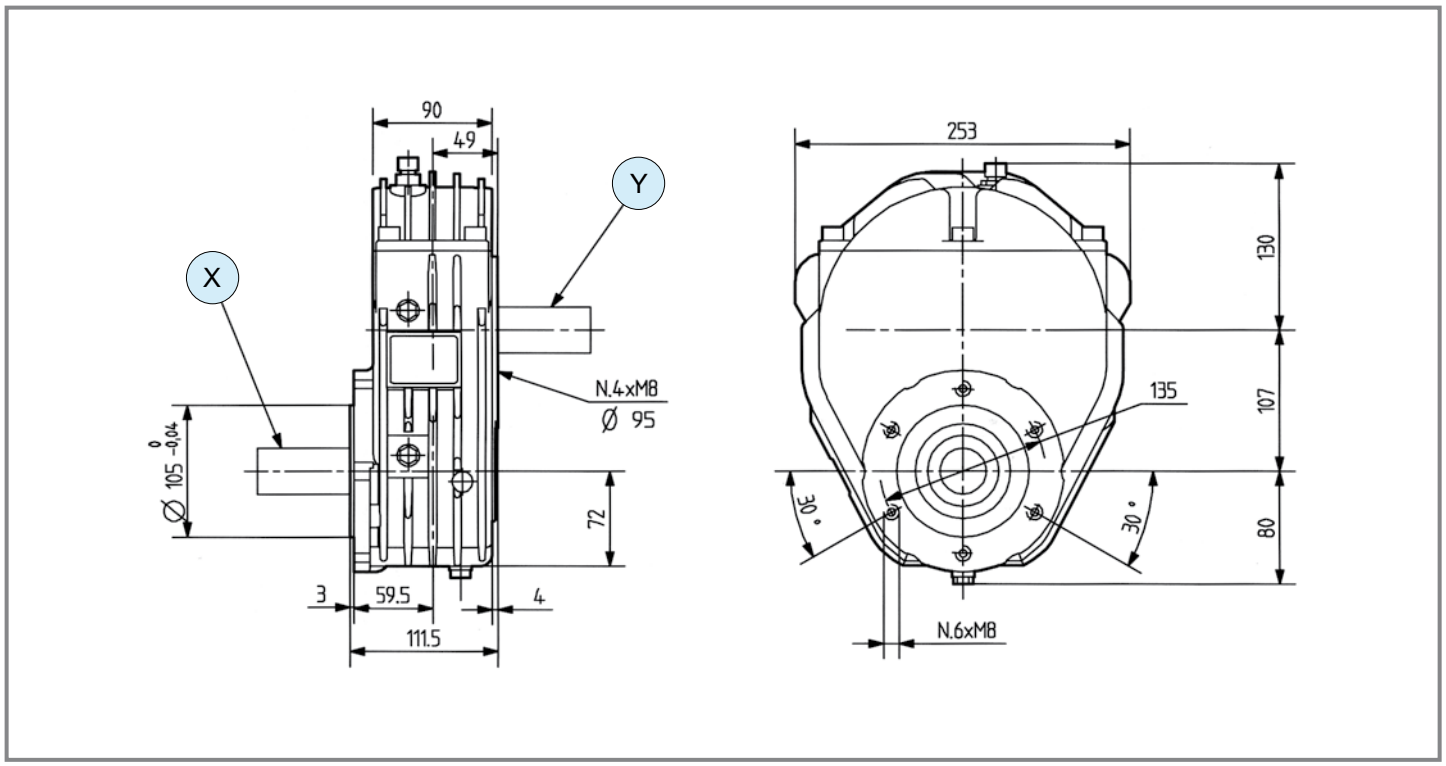

	i	N_1 [rpm]	P_1 [kW]	M_2 [Nm]	rpm Altern.	KVA	Shaft type X	Shaft type Y	Input	Flange type	Code	Mounting	
M	**3.50**	429	30.0	185	1500	29	52	1	Y	-	9.624.009	207 208 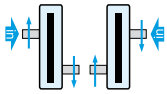	std
	6.90	435	22.0	68	3000	20	52	1	Y	-	9.624.001	207 208 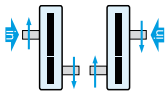	std

A-624C

Code **624**

(5.01)

[kg] 22 | [l] 0.5

Per configurazioni non a catalogo contattare Servizio Tecnico-Commerciale
For non-catalog configurations contact Technical-Commercial Service

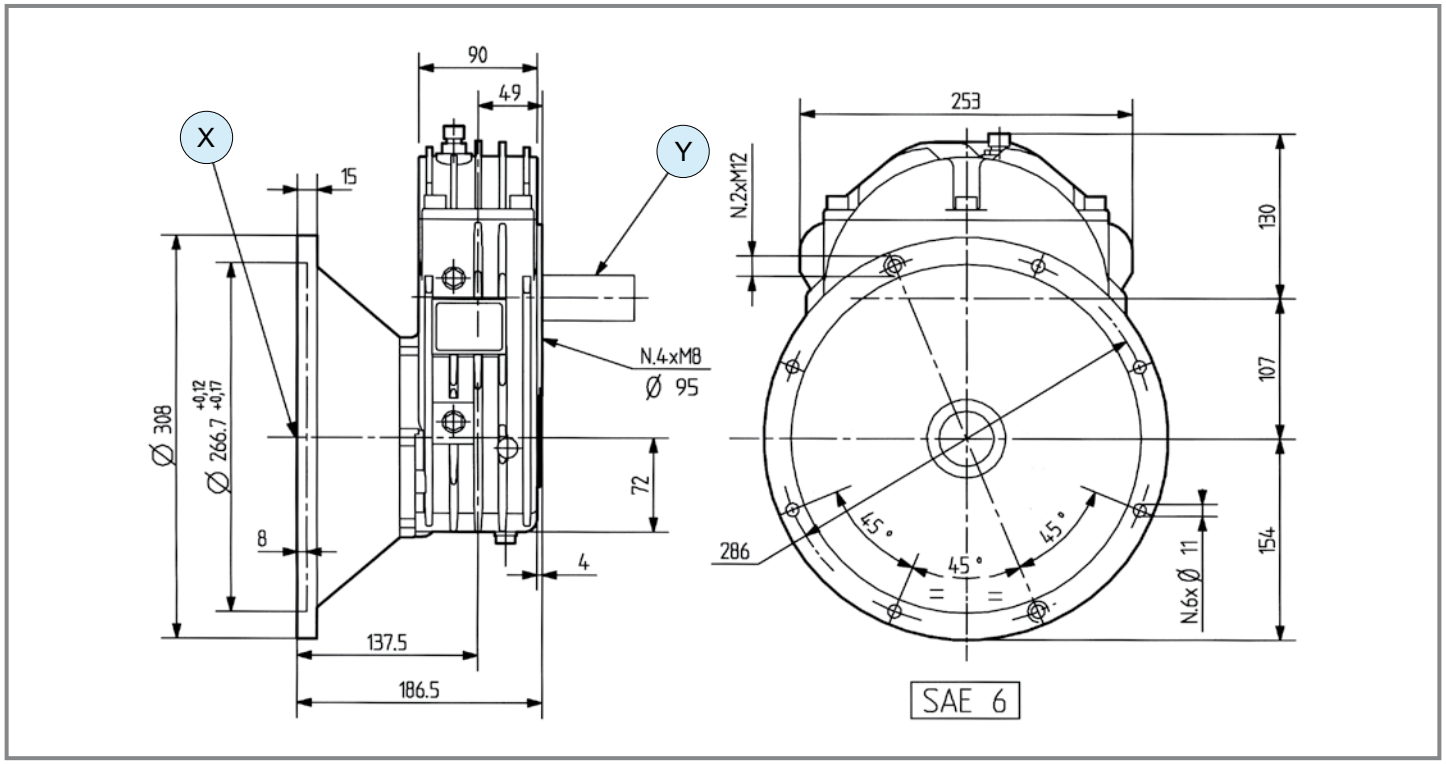

	i	N_1 [rpm]	P_1 [kW]	M_2 [Nm]	rpm Altern.	KVA	Shaft type X	Shaft type Y	Input	Flange type	Code	Mounting	
M	**3.50**	429	30.0	185	1500	29	76 ø42	1 1" 3/8 Z6	Y	SAE 6	9.624.008	207 208	std
M	**3.50**	429	30.0	185	1500	29	77 ø48	1 1" 3/8 Z6	Y	SAE 6	9.624.010	207 208	std
M	**6.90**	435	25.0	77	3000	20	76 ø42	1 1" 3/8 Z6	Y	SAE 6	9.624.007	207 208	std
M	Rinforzato *Reinforced* **3.50**	429	40.0	247	1500	42	76 ø42	1 1" 3/8 Z6	Y	SAE 6	9.624.341	207 208	std

comer industries

A-624E

Code **624**

(5.01)

[kg]	20	[l]	0.5

Per configurazioni non a catalogo contattare Servizio Tecnico-Commerciale
For non-catalog configurations contact Technical-Commercial Service

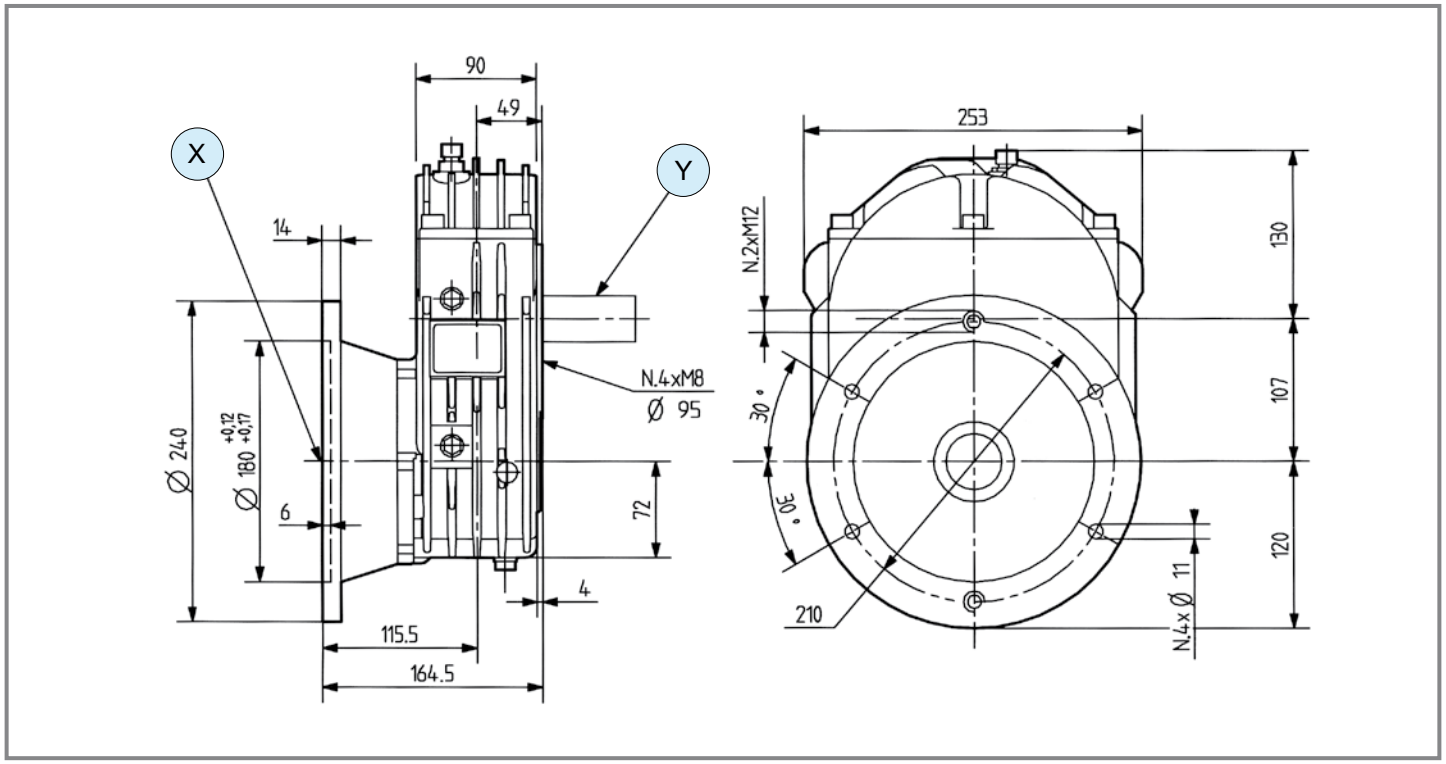

	i	N_1 [rpm]	P_1 [kW]	M_2 [Nm]	rpm Altern.	KVA	Shaft type X	Shaft type Y	Input	Flange type	Code	Mounting	
M	**3.50**	429	30.0	185	1500	29	75 ø35	1 1" 3/8 Z6	Y	-	9.624.011	207 208	std
M	**6.90**	435	22.0	68	3000	20	75 ø35	1 1" 3/8 Z6	Y	-	9.624.005	207 208	std

A-4F

Code **603**

(5.01)

[kg] - | [l] -

Per configurazioni non a catalogo contattare Servizio Tecnico-Commerciale
For non-catalog configurations contact Technical-Commercial Service

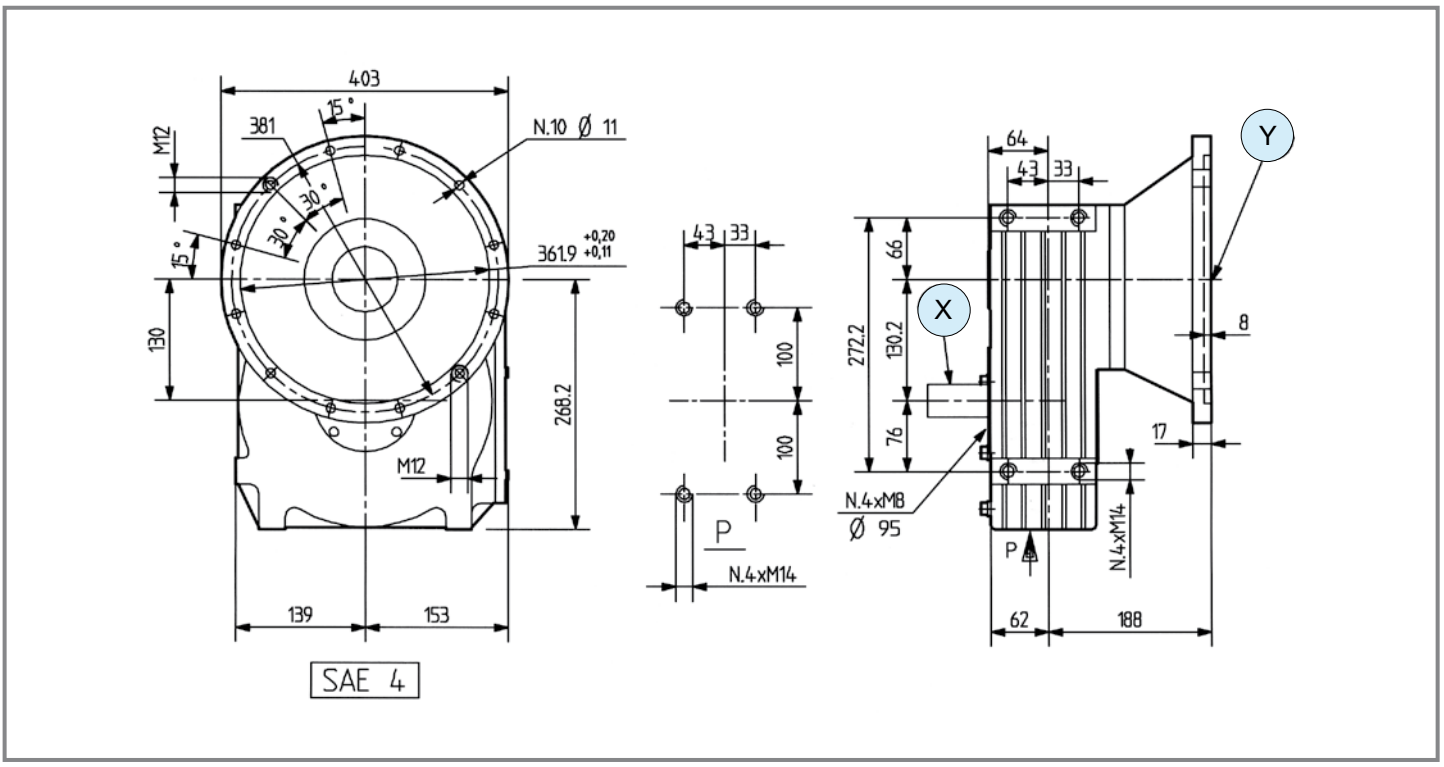

	i	N_1 [rpm]	P_1 [kW]	M_2 [Nm]	rpm Altern.	KVA	Shaft type X	Shaft type Y	Input	Flange type	Code	Mounting	
M	**3.80**	395	55.0	340	1500	47	1 1" 3/8 Z6	78 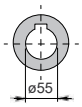 ø55	X	SAE 6	9.603.347	207 208 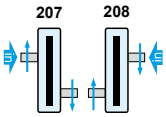	std
M	Rinforzato *Reinforced* **3.80**	395	55.0	340	1500	62	1 1" 3/8 Z6	77 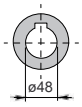 ø48	X	SAE 6	9.603.341	207 208 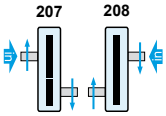	std
M	Rinforzato *Reinforced* **3.80**	395	55.0	340	1500	65	1 1" 3/8 Z6	79 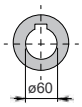 ø60	X	SAE 6	9.603.224	207 208 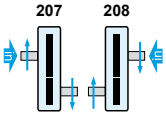	std

comer industries

L-25A

Code **124**

(5.02)

[kg] 4.1 | [l] 0.4

Per configurazioni non a catalogo contattare Servizio Tecnico-Commerciale
For non-catalog configurations contact Technical-Commercial Service

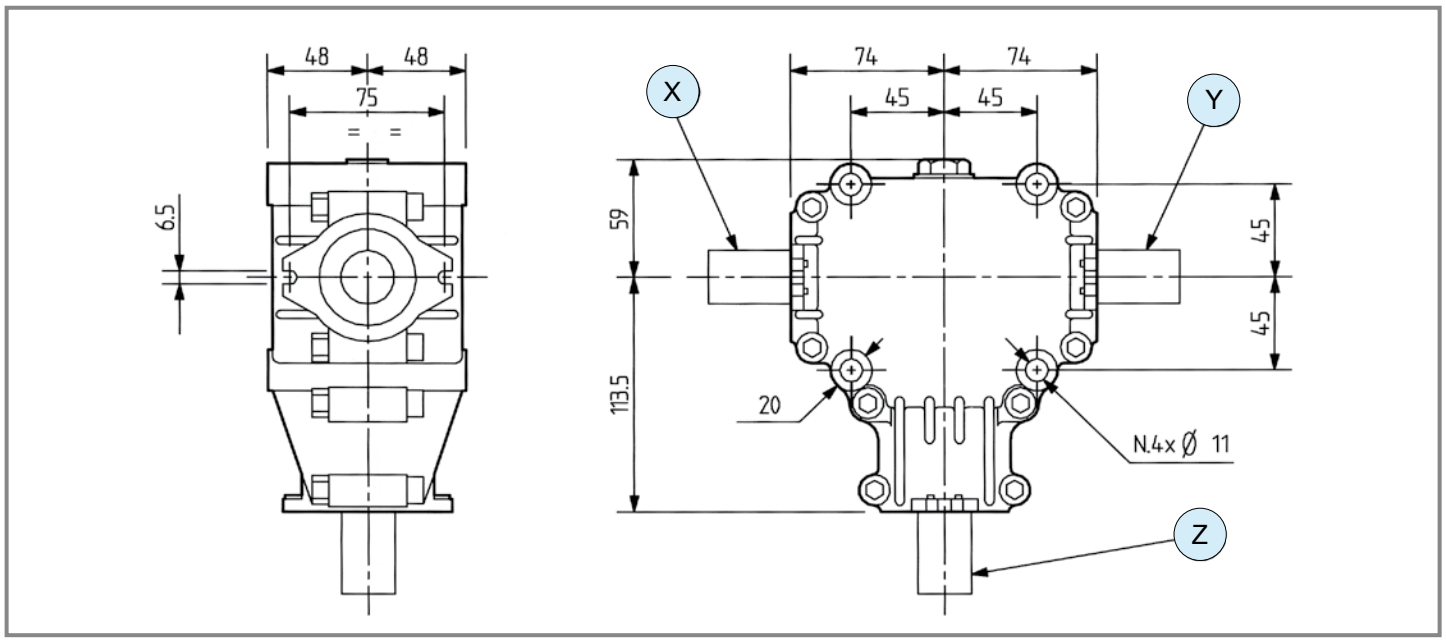

	i	N_1 [rpm]	P_1 [kW]	M_2 [Nm]	Shaft type X	Shaft type Y	Shaft type Z	Input	Code	Mounting	
	2.78	540	5.2	31	1 — 1" 3/8 Z6	-	12 — L 47 — ø 25	X	9.124.029	21 22	std
	2.78	540	5.2	31	-	1 — 1" 3/8 Z6	12 — L 47 — ø 25	Y	9.124.913	23 24	std
	2.78	540	5.2	31	-	1 — 1" 3/8 Z6	16 — L 47 — ø 22	Y	9.124.034	21 22	std
M	**1.90**	540	11.0	99	-	1 — 1" 3/8 Z6	16 — L 60 — ø 22	Y	9.124.900	23 24	std
	1.90	540	11.0	99	1 — 1" 3/8 Z6	-	12 — L 72 — ø 25	X	9.124.901	21 22	std
	1.90	540	11.0	99	-	1 — 1" 3/8 Z6	12 — L 72 — ø 25	Y	9.124.902	23 24	std
	1.90	540	11.0	99	12 — L 54 — ø 25	12 — L 54 — ø 25	1 — 1" 3/8 Z6	Z	9.124.912	33 34	std

T-19G

Code **259**

(5.02)

[kg]	14	[l]	0.9

Per configurazioni non a catalogo contattare Servizio Tecnico-Commerciale
For non-catalog configurations contact Technical-Commercial Service

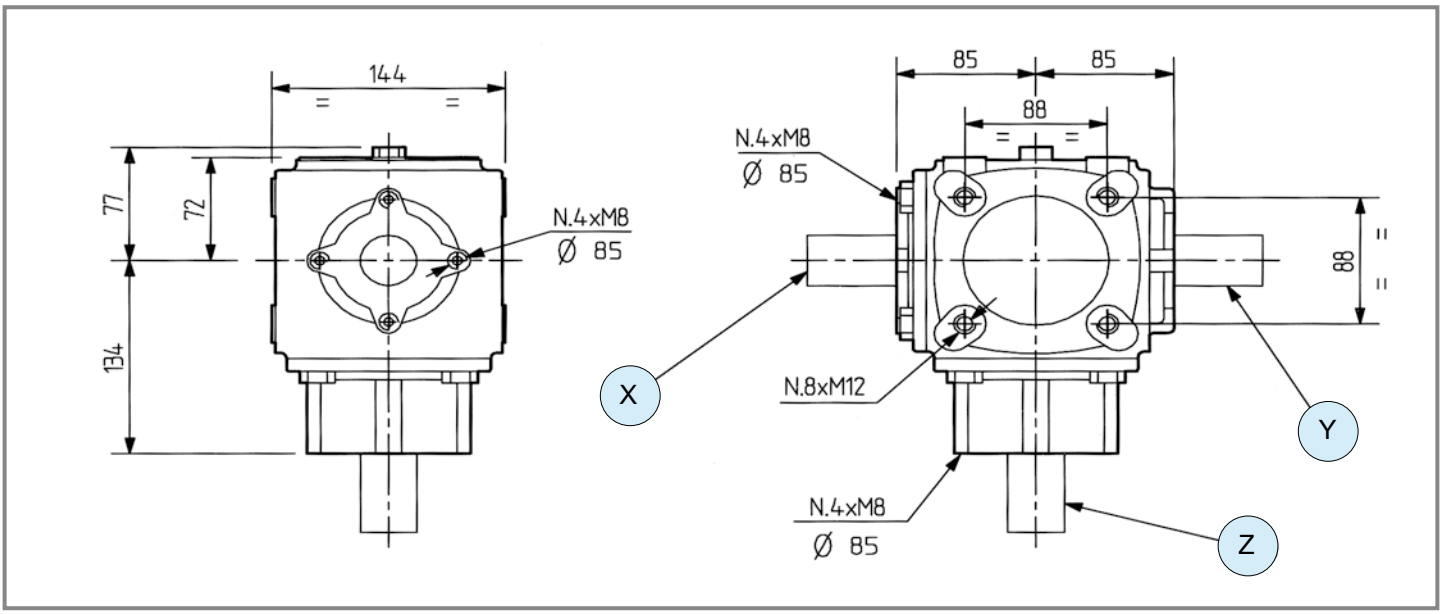

	i	N_1 [rpm]	P_1 [kW]	M_2 [Nm]	Shaft type X	Shaft type Y	Shaft type Z	Input	Code	Mounting	
M	**1.85**	540	12.5	115	-	18 L 60 ø 30	1 1" 3/8 Z6	Z	9.259.917	31 32	std
	1.85	540	12.5	115	18 L 60 ø 30	18 L 60 ø 30	1 1" 3/8 Z6	Z	9.259.918	33 34	std

comer industries

T-27A

Code **267**

(5.02)

[kg]	21

[l]	1.2

Per configurazioni non a catalogo contattare Servizio Tecnico-Commerciale
For non-catalog configurations contact Technical-Commercial Service

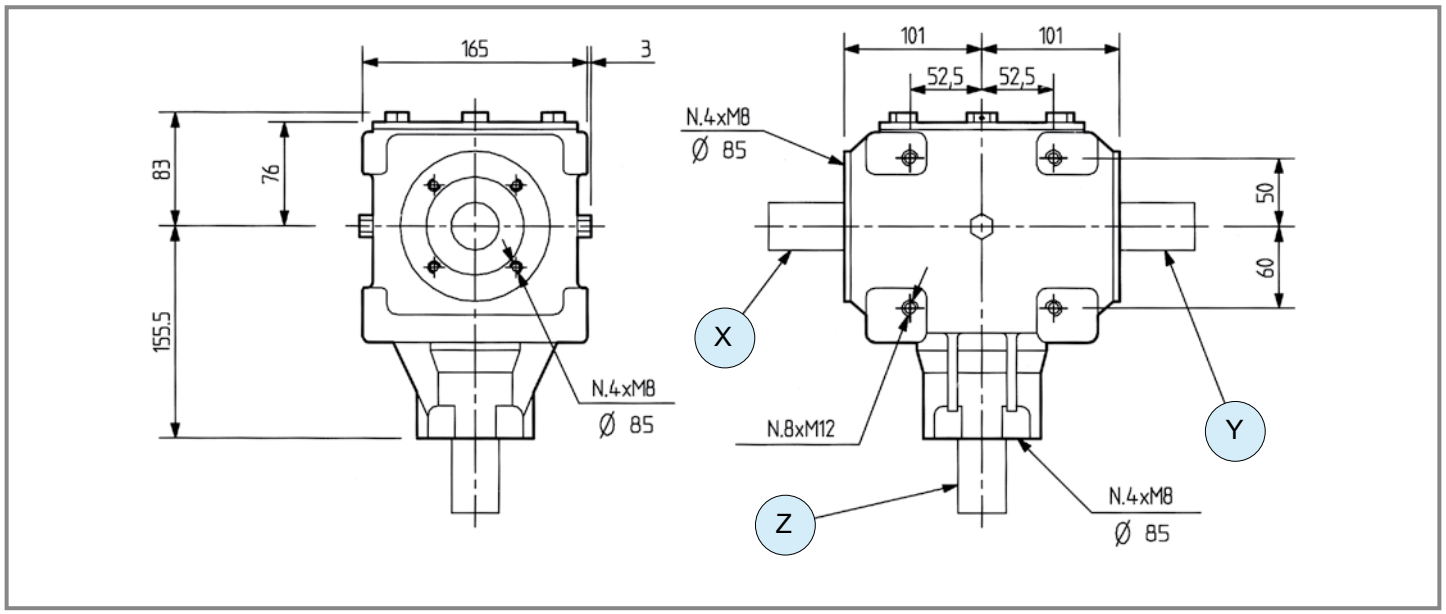

	i	N_1 [rpm]	P_1 [kW]	M_2 [Nm]	Shaft type X	Shaft type Y	Shaft type Z	Input	Code	Mounting	
M	**1.92**	540	22.1	195	3 L 68 ø 35	3 L 68 ø 35	1 1" 3/8 Z6	Z	9.267.034	33 34	std

L-154J

Code **154**

[kg]	60.5	[l]	-

Per configurazioni non a catalogo contattare Servizio Tecnico-Commerciale
For non-catalog configurations contact Technical-Commercial Service

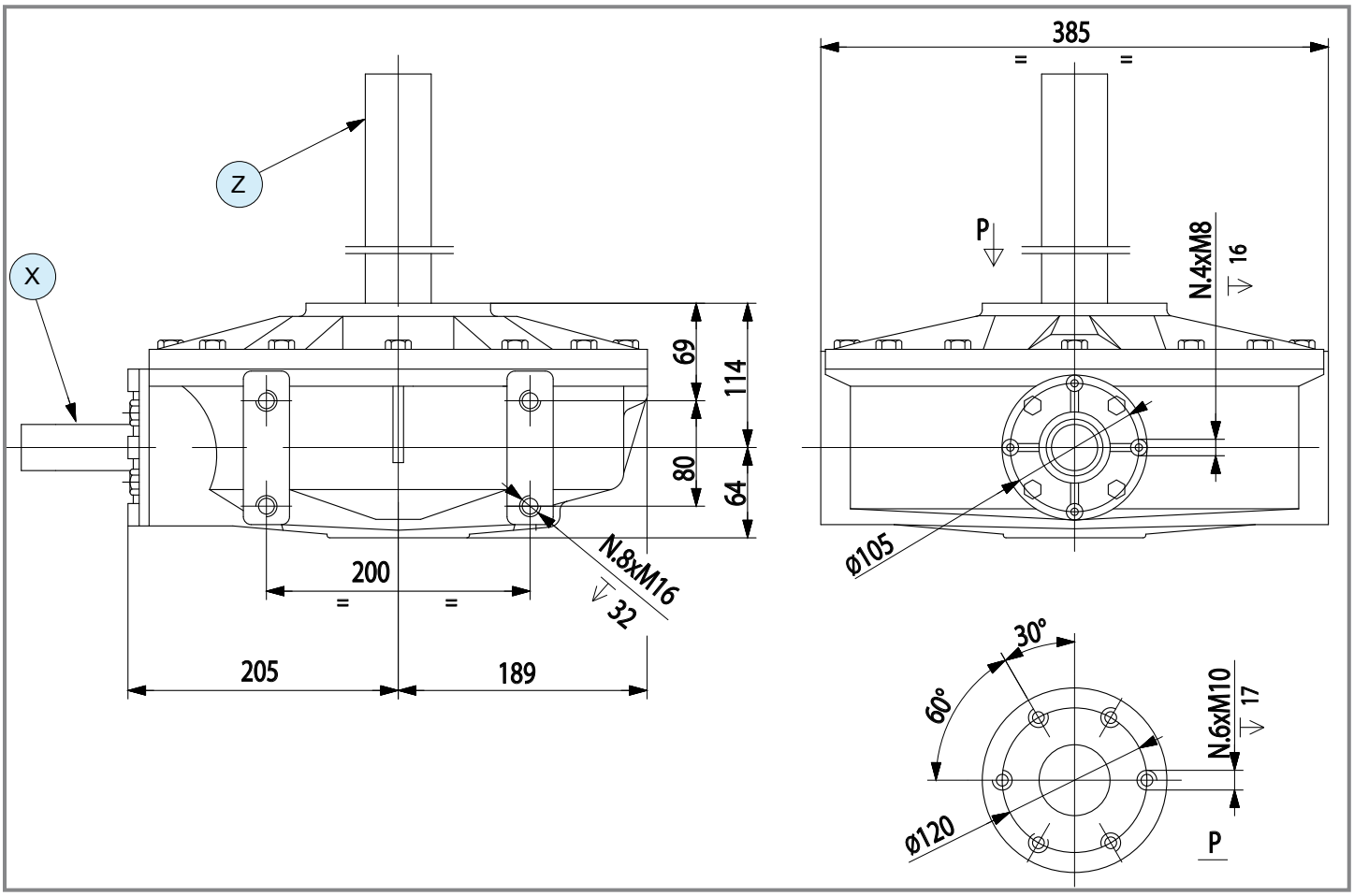

	i	N_1 [rpm]	P_1 [kW]	M_2 [Nm]	Shaft type X	Shaft type Y	Shaft type Z	Input	Code	Mounting	
R	**7.75**	540	19.0	2526	1 1" 3/8 Z6	-	D49.5 key L640	X	9.154.802	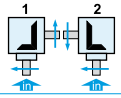	std

comer industries

N-673J

Code **273.8**

(5.02)

[kg] [l]

Per configurazioni non a catalogo contattare Servizio Tecnico-Commerciale
For non-catalog configurations contact Technical-Commercial Service

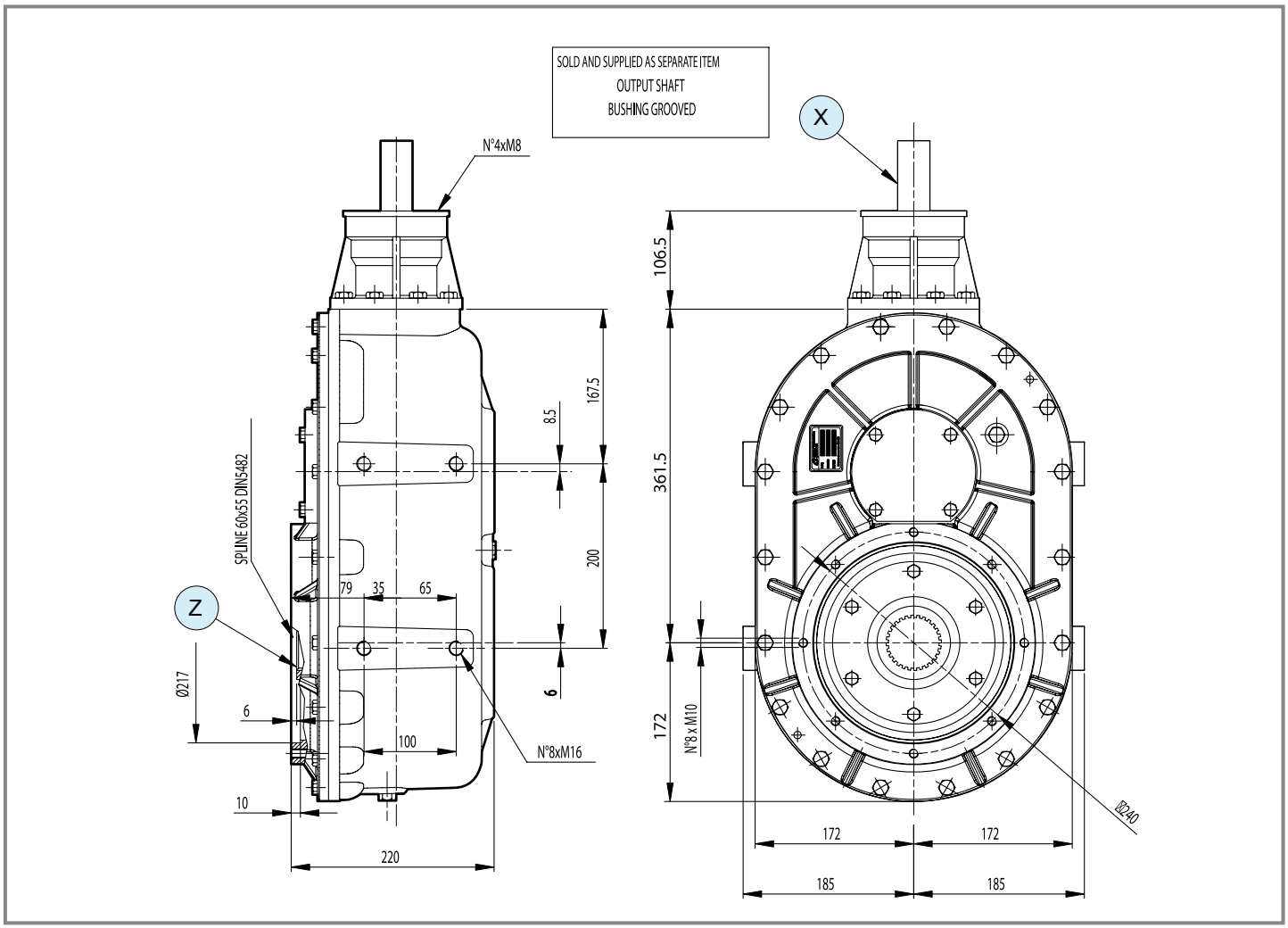

	i	N_1 [rpm]	P_1 [kW]	M_2 [Nm]	Shaft type X	Shaft type Y	Shaft type Z	Input	Code	Mounting	
R	**10.80**	540	55.1	10206	1 1" 3/8 Z6	-	splined 65x60 DIN 5482	X	9.673.801	99 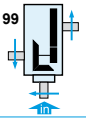	special

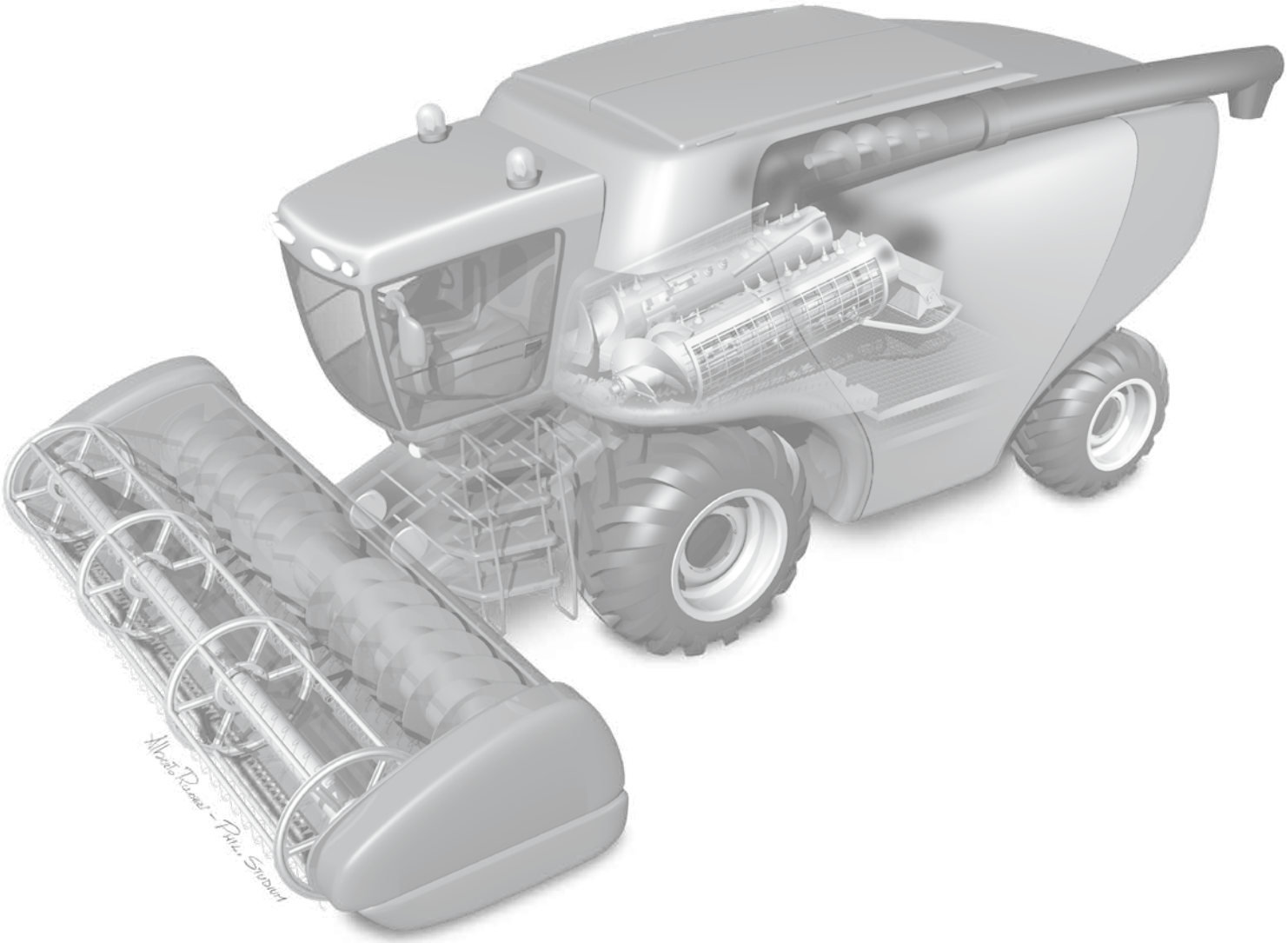

(6.01) Cinematismi per mietitrebbie
Combine Harvester Solution

(6.02) Cinematismi per trincia semoventi
Forage Harvester Driveline Solution

(6.03) Cinematismi per macchine semoventi
Self-propelled Windrower Solution

Per configurazioni non a catalogo contattare Servizio Tecnico-Commerciale
For non-catalog configurations contact Technical-Commercial Service

			p.
CINEMATISMI PER MIETITREBBIE ***COMBINE HARVESTER SOLUTIONS***			
(1)	Riduttori ad assi paralleli per azionamento pompe idrauliche	*Parallel Axle Reducers for Hydraulic Pump Drive*	264
(2)	Gruppo ruota	*Final drive*	264
(3)	Ponte differenziale pivottante e sterzante	*Upper Pivot Sterring Axle*	264
(4)	Gruppi angolari per azionamenti trinciapaglia	*Bevel Gearboxes for Straw Chopper*	264
(5)	Riduttore scarico grano superiore	*Gearbox Upper Unload*	265
(6)	Riduttore scarico grano inferiore	*Gearbox Bottom Unload*	265
(7)	Riduttore azionamento rotore	*Rotor Gearbox*	265
(8)	Riduttore multivelocità per azionamento motore	*Multispeed Rotor Gearbox*	265
CINEMATISMI PER TRINCIA SEMOVENTI ***FORAGE HARVESTER DRIVELINE SOLUTION***			
(1)	Riduttore per azionamento trasmissione trincia	*Input Gearbox of the Main Chopper Drive*	266
(2)	Riduttore per azionamento radiatore	*Exchanger Fan Drive*	266
(3)	Cinematismo integrato trincia	*Integrated Driveline for Chopper*	267
(4)	Cinematismo alimentazione tubo di lancio	*Blower Driveline*	267
CINEMATISMI PER MACCHINE SEMOVENTI ***SELF-PROPELLED WINDROWER SOLUTIONS***			
(1)	Riduttori ad assi paralleli per azionamento pompe idrauliche	*Parallel Axles Reducers for Hydraulic Pump Drive*	268
(2)	Riduttori ruota	*Wheel Drives*	269

Cinematismi per mietitrebbie
Combine Harvester Solution

(6.01)

(1)	Riduttori ad assi paralleli per azionamento pompe idrauliche	*Parallel Axle Reducers for Hydraulic Pump Drive*
(2)	Gruppo ruota	*Final drive*
(3)	Ponte differenziale pivottante e sterzante	*Upper Pivot Sterring Axle*
(4)	Gruppi angolari per azionamenti trinciapaglia	*Bevel Gearboxes for Straw Chopper*

Cinematismi per mietitrebbie
Combine Harvester Solution

(6.01)

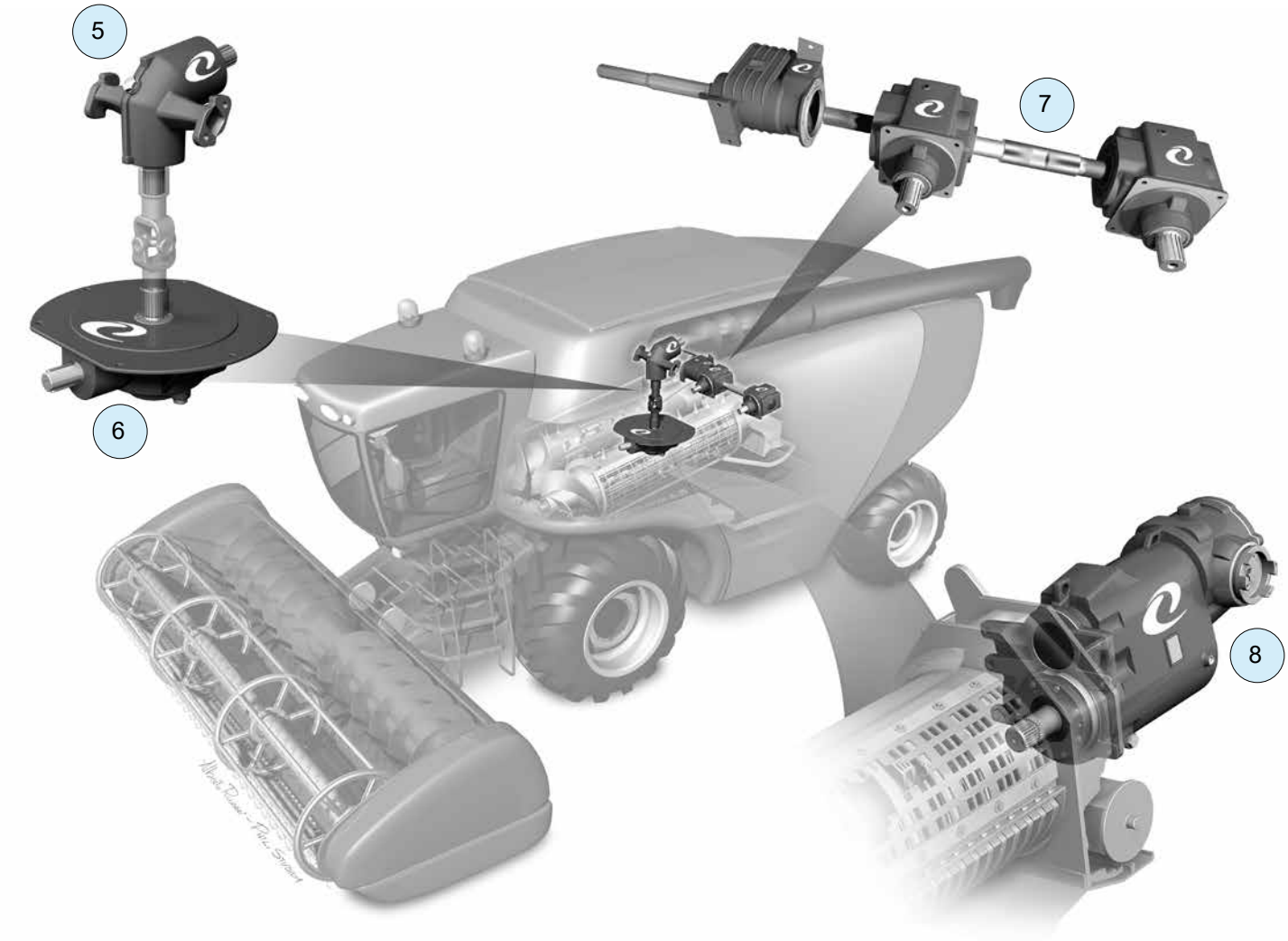

(5)	Riduttore scarico grano superiore	*Gearbox Upper Unload*
(6)	Riduttore scarico grano inferiore	*Gearbox Bottom Unload*
(7)	Riduttore azionamento rotore	*Rotor Gearbox*
(8)	Riduttore multivelocità per azionamento motore	*Multispeed Rotor Gearbox*

Cinematismi per trincia semoventi
Forage Harvester Driveline Solution

(6.02)

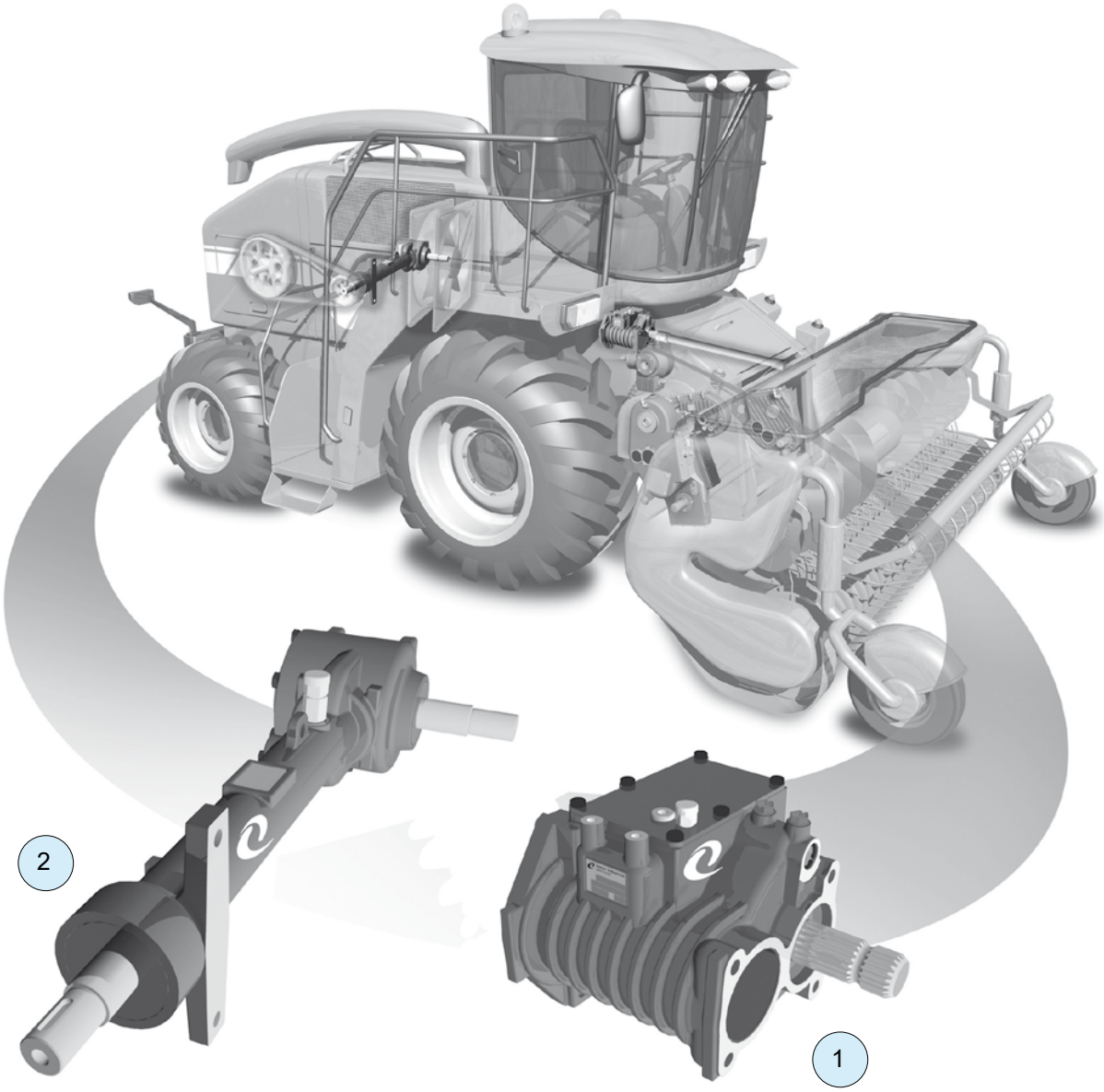

(1)	Riduttore per azionamento trasmissione trincia	*Input Gearbox of the Main Chopper Drive*
(2)	Riduttore per azionamento radiatore	*Exchanger Fan Drive*

Cinematismi per trincia semoventi
Forage Harvester Driveline Solution

(6.02)

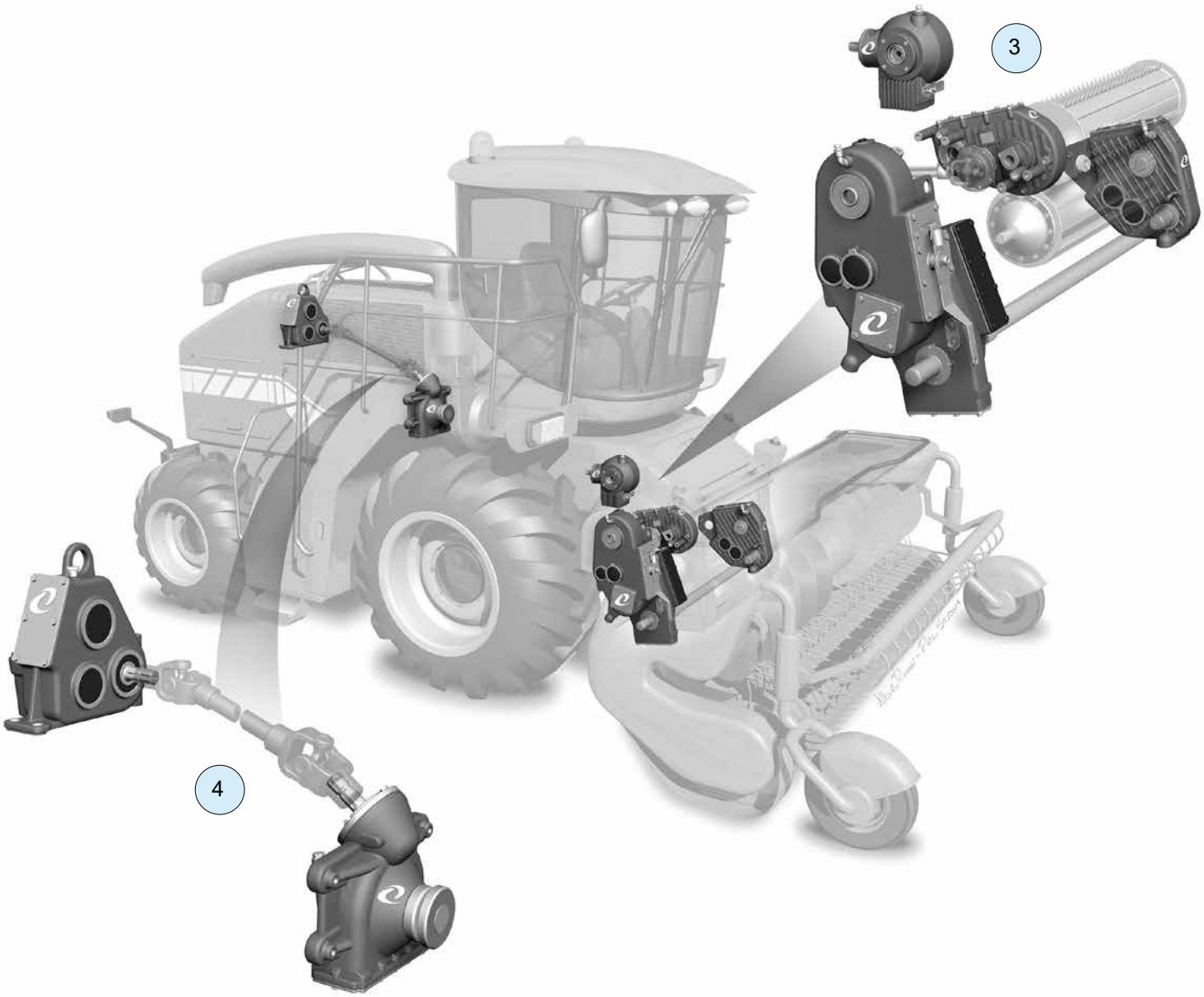

(3)	Cinematismo integrato trincia	*Integrated Driveline for Chopper*
(4)	Cinematismo alimentazione tubo di lancio	*Blower Driveline*

Cinematismi per macchine semoventi
Self-propelled Windrower Solution

(6.03)

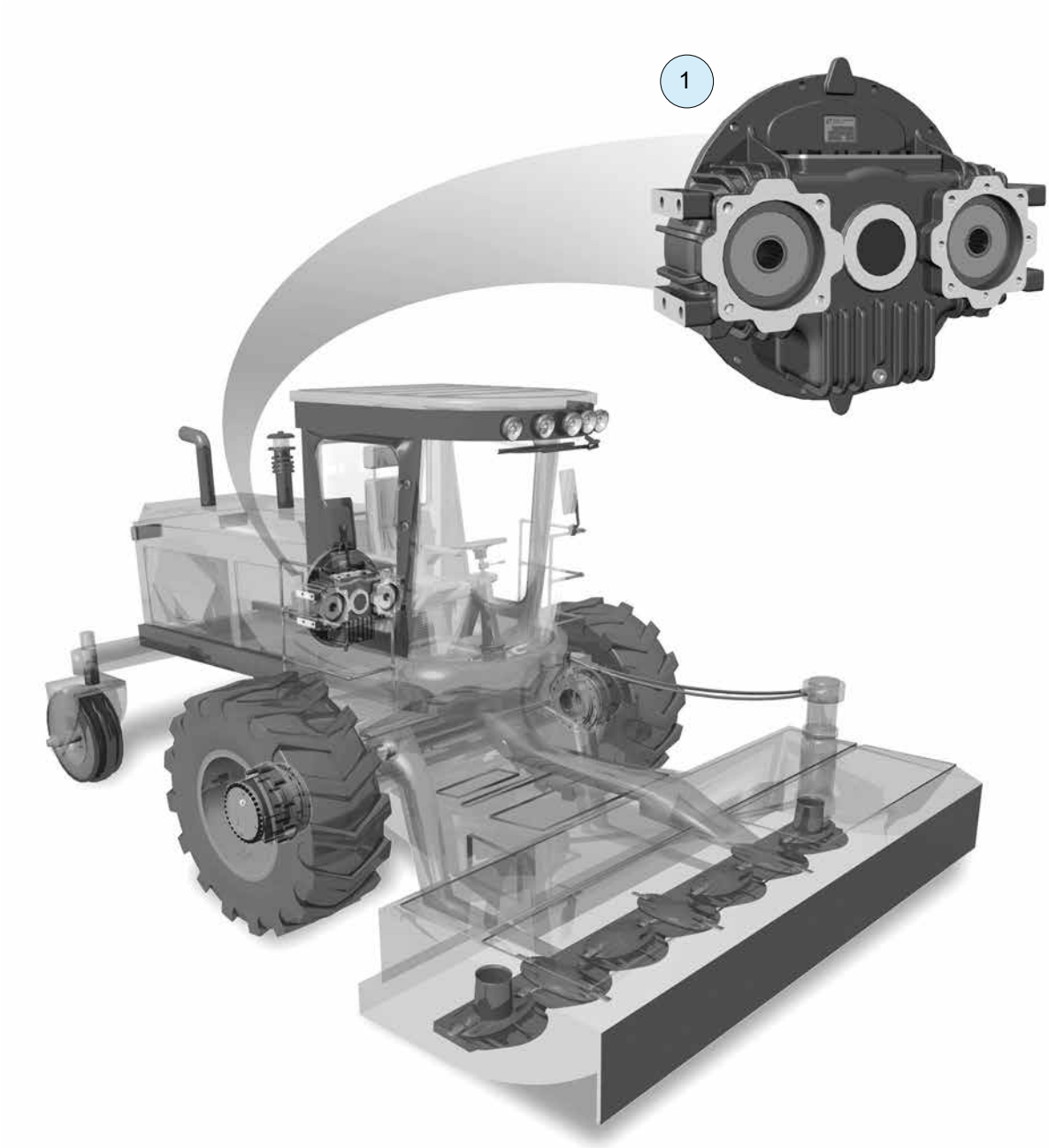

(1)	Riduttori ad assi paralleli per azionamento pompe idrauliche	*Parallel Axle Reducer for Hydraulic Pump Drive*

Cinematismi per macchine semoventi
Self-propelled Windrower Solution

(6.03)

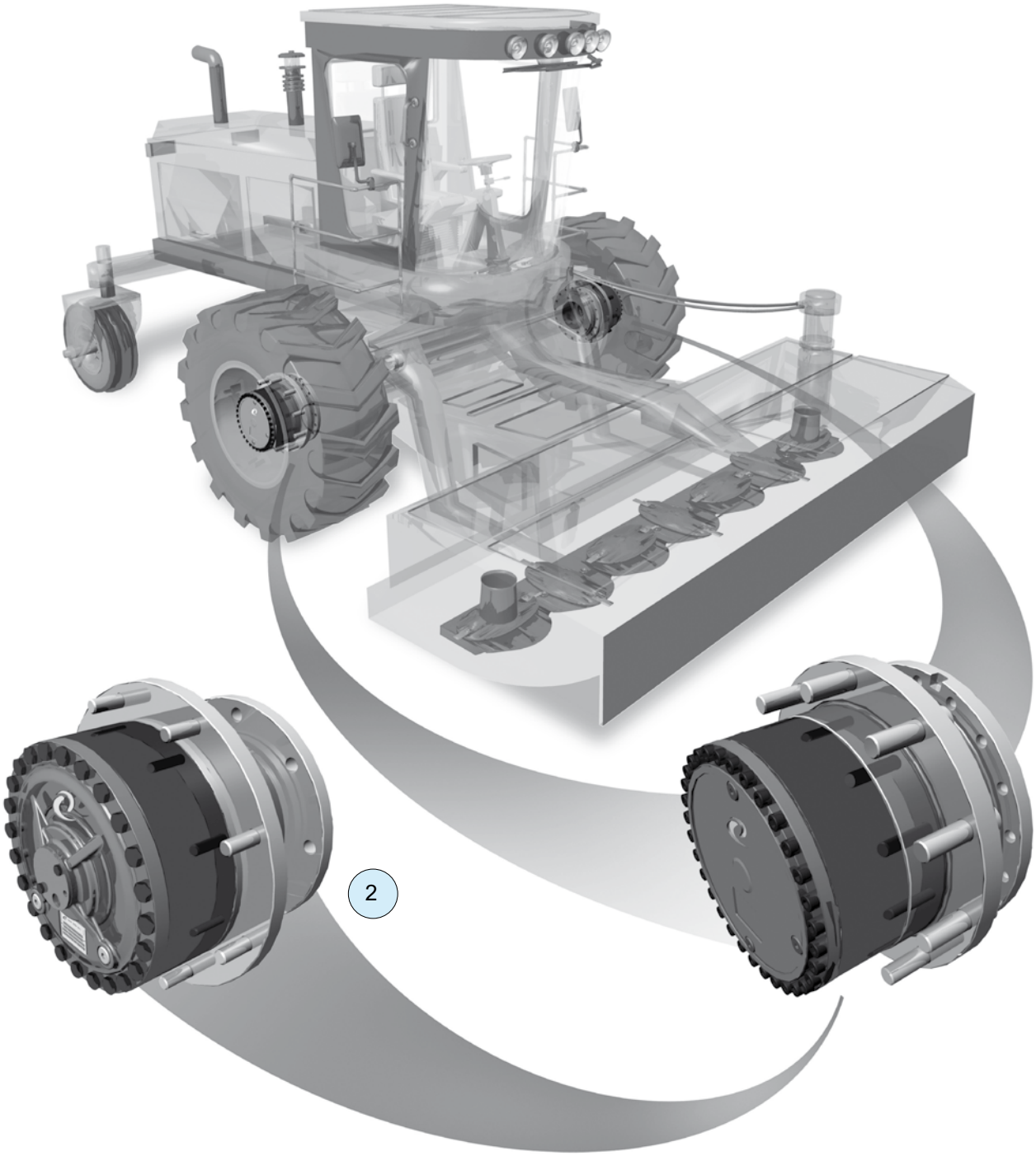

(2)	Riduttori ruota	*Wheel Drives*

Tipo *Type*	Applicazioni *Applications*		p.
A-16A	*Gamma assi paralleli multifunzione/Multifunction Paralel Gearboxes*	(0.02)	63
A-1B	*Gruppi elettrogeni / P.T.O. Generators*	(5.01)	252
A-20A	*Gamma assi paralleli multifunzione/Multifunction Paralel Gearboxes*	(0.02)	62
A-3A	*Gamma assi paralleli multifunzione/Multifunction Paralel Gearboxes*	(0.02)	54
A-4A	*Gamma assi paralleli multifunzione/Multifunction Paralel Gearboxes*	(0.02)	58
A-4A	*Pompe centrifughe per irrigazione / Centrifugal Pumps for Irrigation*	(3.03)	172
A-4F	*Gruppi elettrogeni / P.T.O. Generators*	(5.01)	256
A-613R	*Carri miscelatori / Feed Mixer Machines*	(4.06)	222
A-614R	*Carri miscelatori / Feed Mixer Machines*	(4.06)	223
A-623A	*Gamma assi paralleli multifunzione/Multifunction Paralel Gearboxes*	(0.02)	61
A-624A	*Gamma assi paralleli multifunzione/Multifunction Paralel Gearboxes*	(0.02)	56
A-624B	*Gruppi elettrogeni / P.T.O. Generators*	(5.01)	253
A-624C	*Gruppi elettrogeni / P.T.O. Generators*	(5.01)	254
A-624E	*Gruppi elettrogeni / P.T.O. Generators*	(5.01)	255
A-629A	*Gamma assi paralleli multifunzione/Multifunction Paralel Gearboxes*	(0.02)	60
A-629A	*Pompe centrifughe per irrigazione / Centrifugal Pumps for Irrigation*	(3.03)	173
A-640A	*Decespugliatori idraulici / Hydraulic Cutters*	(1.05)	111
A-649A	*Decespugliatori idraulici / Hydraulic Cutters*	(1.05)	110
C-3A	*Carri miscelatori / Feed Mixer Machines*	(4.06)	220
D-21A	*Atomizzatori / Sprayers*	(3.01)	160
D-21A double	*Atomizzatori / Sprayers*	(3.01)	162
D-21B	*Atomizzatori / Sprayers*	(3.01)	161
D-21F	*Atomizzatori / Sprayers*	(3.01)	161
D-27A	*Atomizzatori / Sprayers*	(3.01)	158
D-27B	*Atomizzatori / Sprayers*	(3.01)	159
D-27J	*Atomizzatori / Sprayers*	(3.01)	159
D-732A	*Carri miscelatori / Feed Mixer Machines*	(4.06)	237
D-741A	*Irrigatori a bobina / Irrigation Reels*	(3.04)	174
D-742A	*Irrigatori a bobina / Irrigation Reels*	(3.04)	180

Tipo *Type*	Applicazioni *Applications*		p.
D-743A	*Irrigatori a bobina / Irrigation Reels*	(3.04)	175
D-744A	*Irrigatori a bobina / Irrigation Reels*	(3.04)	178
D-745A	*Irrigatori a bobina / Irrigation Reels*	(3.04)	176
D-7A	*Atomizzatori / Sprayers*	(3.01)	156
D-7B	*Atomizzatori / Sprayers*	(3.01)	157
D-825A	*Erpici rotanti / Rotary Harrows*	(2.03)	145
DP-732B	*Carri miscelatori e lancia paglia/ Feed Mixer Machines and Straw Blower*	(4.06) (4.09)	219
DTU-742A	*Irrigatori a bobina / Irrigation Reels*	(3.04)	181
DTU-744A	*Irrigatori a bobina / Irrigation Reels*	(3.04)	179
DTU-745A	*Irrigatori a bobina / Irrigation Reels*	(3.04)	177
DV-733F	*Erpici rotanti / Rotary Harrows*	(2.03)	143
DV-813F	*Erpici rotanti / Rotary Harrows*	(2.03)	136
DV-818F	*Erpici rotanti / Rotary Harrows*	(2.03)	139
DV-823F	*Erpici rotanti / Rotary Harrows*	(2.03)	141
DZ-811F	*Zappatrici - Fresatrici / Rotary Tillers*	(2.01)	126
DZ-816F	*Zappatrici - Fresatrici / Rotary Tillers*	(2.01)	128
DZ-821F	*Zappatrici - Fresatrici / Rotary Tillers*	(2.01)	130
FR-507	*Falciatrici rotative / Cutter Bars*	(4.01)	184
FR-522	*Falciatrici rotative / Cutter Bars*	(4.01)	185
FR-567	*Falciatrici rotative / Cutter Bars*	(4.01)	186
K-789A	*Giroandanatori / Rotary Rakes*	(4.02)	196
K-791A	*Giroandanatori / Rotary Rakes*	(4.02)	197
K-792A	*Giroandanatori / Rotary Rakes*	(4.02)	198
K-794A	*Giroandanatori / Rotary Rakes*	(4.02)	199

Tipo *Type*	Applicazioni *Applications*		p.
K-795T	*Giroandanatori / Rotary Rakes*	(4.02)	200
K-799A	*Giroandanatori / Rotary Rakes*	(4.02)	202
L-150C	*Spandiconcime / Fertilizer Spreaders*	(3.02)	167
L-150J	*Gamma angolari multifunzione/Multifunction Angular Gearboxes*	(0.01)	11
I-150J	*Spandiconcime / Fertilizer Spreaders*	(3.02)	166
L-154J	*Seghe circolari e a nastro / Circular Saws and Belt Saws*	(5.02)	260
L-170B	*Punte da mais / Corn Headers*	(4.08)	240
L-196J	*Trivelle / Post Hole Diggers*	(2.04)	149
L-25A	*Gamma angolari multifunzione/Multifunction Angular Gearboxes*	(0.01)	14
L-25A	*Trinciastocchi/Flail Mowers*	(1.01)	70
L-25A	*Seghe circolari e a nastro / Circular Saws and Belt Saws*	(5.02)	257
L-25C	*Spandiconcime / Fertilizer Spreaders*	(3.02)	168
L-25J	*Gamma angolari multifunzione/Multifunction Angular Gearboxes*	(0.01)	14
L-25J	*Trinciastocchi/Flail Mowers*	(1.01)	70
L-25J	*Spandiconcime / Fertilizer Spreaders*	(3.02)	169
T-281A	*Gamma angolari multifunzione/Multifunction Angular Gearboxes*	(0.01)	16
T-281J	*Gamma angolari multifunzione/Multifunction Angular Gearboxes*	(0.01)	16
L-5A	*Gamma angolari multifunzione/Multifunction Angular Gearboxes*	(0.01)	12
L-5A	*Trinciastocchi/Flail Mowers*	(1.01)	68
LB-324J	*Spandifieno rotativi / Rotary Tedders*	(4.05)	208
LF-125J	*Decespugliatrici / Rotary Cutters*	(1.03)	98
LF-139A	*Decespugliatrici / Rotary Cutters*	(1.03)	96
LF-140A	*Decespugliatrici / Rotary Cutters*	(1.03)	92
LF-140J	*Decespugliatrici / Rotary Cutters*	(1.03)	92

Tipo *Type*	Applicazioni *Applications*		p.
LF-141A	*Falciadistruggierba / Rotary Mowers*	(1.02)	90
LF-142A	*Falciatrici rotative / Cutter Bars*	(4.01)	187
LF-149B	*Decespugliatrici / Rotary Cutters*	(1.03)	95
LF-151A	*Falciadistruggierba / Rotary Mowers*	(1.02)	89
LF-153A	*Gruppi testate da grano e girasole / Grain Header and Sunflower Headers*	(4.10)	248
LF-199A	*Decespugliatrici / Rotary Cutters*	(1.03)	94
LF-205J	*Decespugliatrici / Rotary Cutters*	(1.03)	91
LF-211J	*Falciadistruggierba / Rotary Mowers*	(1.02)	88
LF-227J	*Decespugliatrici / Rotary Cutters*	(1.03)	97
LF-32A	*Decespugliatrici / Rotary Cutters*	(1.03)	93
LL-5L	*Trinciastocchi/Flail Mowers*	(1.01)	69
LTV-14F	*Erpici rotanti / Rotary Harrows*	(2.03)	133
M-797A	*Punte da mais / Corn Headers*	(4.08)	243
MR-90	*Gamma assi paralleli multifunzione/Multifunction Paralel Gearboxes*	(0.02)	57
MV-814F	*Erpici rotanti / Rotary Harrows*	(2.03)	137
MV-817F	*Erpici rotanti / Rotary Harrows*	(2.03)	138
MV-819F	*Erpici rotanti / Rotary Harrows*	(2.03)	140
MV-824F	*Erpici rotanti / Rotary Harrows*	(2.03)	142
MV-826F	*Erpici rotanti / Rotary Harrows*	(2.03)	144
MZ-1A	*Zappatrici - Fresatrici / Rotary Tillers*	(2.01)	123
MZ-2A	*Zappatrici - Fresatrici / Rotary Tillers*	(2.01)	124
MZ-3A	*Zappatrici - Fresatrici / Rotary Tillers*	(2.01)	125
MZ-812F	*Zappatrici - Fresatrici / Rotary Tillers*	(2.01)	127
MZ-817F	*Zappatrici - Fresatrici / Rotary Tillers*	(2.01)	129

Tipo *Type*	Applicazioni *Applications*		p.
MZ-822F	*Zappatrici - Fresatrici / Rotary Tillers*	(2.01)	131
MZ-827F	*Erpici rotanti / Rotary Harrows*	(2.03)	132
N-2A	*Spandiletame / Manure Spreaders*	(1.04)	107
N-669J	*Punte da mais / Corn Headers*	(4.08)	241
N-673J	*Carri miscelatori / Feed Mixer Machines*	(4.06)	226
N-673J	*Seghe circolari e a nastro / Circular Saws and Belt Saws*	(5.02)	261
NV-676A	*Falciatrici rotative / Cutter Bars*	(4.01)	192
OS-784	*Gruppi testate da grano e girasole / Grain Header and Sunflower Headers*	(4.10)	246
OS-861	*Gruppi testate da grano e girasole / Grain Header and Sunflower Headers*	(4.10)	247
PGA-1202	*Carri miscelatori / Feed Mixer Machines*	(4.06)	227
PGA-1602	*Carri miscelatori / Feed Mixer Machines*	(4.06)	228
PGA-1602 double	*Carri miscelatori / Feed Mixer Machines*	(4.06)	229
PGA-1603	*Carri miscelatori / Feed Mixer Machines*	(4.06)	230
PGA-1603 hyd	*Carri miscelatori / Feed Mixer Machines*	(4.06)	231
PGA-2102	*Carri miscelatori / Feed Mixer Machines*	(4.06)	232
PGA-2103	*Carri miscelatori / Feed Mixer Machines*	(4.06)	232
PGA-2502	Carri miscelatori / Feed Mixer Machines	(4.06)	233
PGA-2503	*Carri miscelatori / Feed Mixer Machines*	(4.06)	234
PGA-3003	*Carri miscelatori / Feed Mixer Machines*	(4.06)	235
PGA-4203	*Carri miscelatori / Feed Mixer Machines*	(4.06)	236
PGA-502	*Carri miscelatori / Feed Mixer Machines*	(4.06)	224
T-19	*Gamma angolari multifunzione/Multifunction Angular Gearboxes*	(0.01)	18
T-19G	*Seghe circolari e a nastro / Circular Saws and Belt Saws*	(5.02)	258
T-22A	*Gamma angolari multifunzione/Multifunction Angular Gearboxes*	(0.01)	42

Tipo *Type*	Applicazioni *Applications*		p.
T-22F	*Trivelle / Post Hole Diggers*	(2.04)	152
T-25J	*Decespugliatrici / Rotary Cutters*	(1.03)	101
T-269A	*Gamma angolari multifunzione/Multifunction Angular Gearboxes*	(0.01)	44
T-269B	*Gamma angolari multifunzione/Multifunction Angular Gearboxes*	(0.01)	45
T-269B	*Trinciastocchi/Flail Mowers*	(1.01)	82
T-278A	*Gamma angolari multifunzione/Multifunction Angular Gearboxes*	(0.01)	28
T-278A	Trivelle / Post Hole Diggers	(2.04)	150
T-278D	*Falciatrici rotative / Cutter Bars*	(4.01)	191
T-279A	*Gamma angolari multifunzione/Multifunction Angular Gearboxes*	(0.01)	40
T-279D	*Falciatrici rotative / Cutter Bars*	(4.01)	193
T-279J	*Gamma angolari multifunzione/Multifunction Angular Gearboxes*	(0.01)	40
T-27A	*Gamma angolari multifunzione/Multifunction Angular Gearboxes*	(0.01)	20
T-27A	*Seghe circolari e a nastro / Circular Saws and Belt Saws*	(5.02)	259
T-27J	*Gamma angolari multifunzione/Multifunction Angular Gearboxes*	(0.01)	20
T-28J	*Gamma angolari multifunzione/Multifunction Angular Gearboxes*	(0.01)	22
T-290A	*Gamma angolari multifunzione/Multifunction Angular Gearboxes*	(0.01)	36
T-290F	*Trivelle / Post Hole Diggers*	(2.04)	151
T-290HD	*Gamma angolari multifunzione/Multifunction Angular Gearboxes*	(0.01)	38
T-290HD	*Presse raccoglitrici / Balers*	(4.04)	215
T-292B	*Gamma angolari multifunzione/Multifunction Angular Gearboxes*	(0.01)	39
T-292E	*Presse raccoglitrici / Balers*	(4.04)	214
T-301B	*Gamma angolari multifunzione/Multifunction Angular Gearboxes*	(0.01)	46
T-301B	*Trinciastocchi/Flail Mowers*	(1.01)	83
T-304A	*Gamma angolari multifunzione/Multifunction Angular Gearboxes*	(0.01)	26

Tipo *Type*	Applicazioni *Applications*		p.
T-304A	*Falciatrici rotative / Cutter Bars*	(4.01)	188
T-304A	*Presse raccoglitrici / Balers*	(4.04)	212
T-304A	*Punte da mais / Corn Headers*	(4.08)	242
T-304C	*Trivelle / Post Hole Diggers*	(2.04)	148
T-305J	*Decespugliatrici / Rotary Cutters*	(1.03)	102
T-310A	*Gamma angolari multifunzione/Multifunction Angular Gearboxes*	(0.01)	24
T-310J	*Gamma angolari multifunzione/Multifunction Angular Gearboxes*	(0.01)	24
T-311A	*Gamma angolari multifunzione/Multifunction Angular Gearboxes*	(0.01)	30
T-311J	*Gamma angolari multifunzione/Multifunction Angular Gearboxes*	(0.01)	30
T-312A	*Gamma angolari multifunzione/Multifunction Angular Gearboxes*	(0.01)	32
T-312HD	*Gamma angolari multifunzione/Multifunction Angular Gearboxes*	(0.01)	32
T-312HD	*Falciatrici rotative / Cutter Bars*	(4.01)	189
T-312J	*Gamma angolari multifunzione/Multifunction Angular Gearboxes*	(0.01)	32
T-313J	*Trinciastocchi/Flail Mowers*	(1.01)	80
T-331A	*Gamma angolari multifunzione/Multifunction Angular Gearboxes*	(0.01)	48
T-331A	*Trinciastocchi/Flail Mowers*	(1.01)	84
T-332A	*Gamma angolari multifunzione/Multifunction Angular Gearboxes*	(0.01)	50
TB-19C	*Spandiletame / Manure Spreaders*	(1.04)	105
TB-19J	*Zappatrici multiple / Multiple Rotary Tillers*	(2.02)	117
TB-22C	*Zappatrici multiple / Multiple Rotary Tillers*	(2.02)	120
TB-278C	*Zappatrici multiple / Multiple Rotary Tillers*	(2.02)	119
TB-27C	*Spandiletame / Manure Spreaders*	(1.04)	106
TB-27C	*Zappatrici multiple / Multiple Rotary Tillers*	(2.02)	118
TB-27J	*Zappatrici multiple / Multiple Rotary Tillers*	(2.02)	118

Tipo *Type*	Applicazioni *Applications*		p.
TB-281J	*Zappatrici multiple / Multiple Rotary Tillers*	(2.02)	116
TB-318J	*Spandifieno rotativi / Rotary Tedders*	(4.05)	204
TB-319J	*Spandifieno rotativi / Rotary Tedders*	(4.05)	205
TB-320A	*Spandifieno rotativi / Rotary Tedders*	(4.05)	206
TB-323J	*Spandifieno rotativi / Rotary Tedders*	(4.05)	207
TF-26A	*Decespugliatrici / Rotary Cutters*	(1.03)	99
TF-285B	*Decespugliatrici / Rotary Cutters*	(1.03)	100
TL-281E	*Trinciastocchi/Flail Mowers*	(1.01)	71
TL-290A	*Trinciastocchi/Flail Mowers*	(1.01)	78
TL-292B	*Trinciastocchi/Flail Mowers*	(1.01)	81
TL-310A	*Trinciastocchi/Flail Mowers*	(1.01)	72
TL-310J	*Trinciastocchi/Flail Mowers*	(1.01)	72
TL-311A	*Trinciastocchi/Flail Mowers*	(1.01)	74
TL-311J	*Trinciastocchi/Flail Mowers*	(1.01)	74
TL-312A	*Trinciastocchi/Flail Mowers*	(1.01)	76
TLZ-21J	*Zappatrici - Fresatrici / Rotary Tillers*	(2.01)	121
TLZ-292A	*Zappatrici - Fresatrici / Rotary Tillers*	(2.01)	122
TV-274A	*Erpici rotanti / Rotary Harrows*	(2.03)	134
TV-290H	*Presse raccoglitrici / Balers*	(4.04)	213
TV-301H	*Erpici rotanti / Rotary Harrows*	(2.03)	135
TV-312H	*Falciatrici rotative / Cutter Bars*	(4.01)	190
Y-890A	*Giroandanatori / Rotary Rakes*	(4.02)	203

5 mm

5 mm

5 mm

comer industries

Comer Industries Spa

42046 Reggiolo (RE) - Italy - Via Magellano, 27 - Tel. +39 0522 974111 - Fax +39 0522 973249
www.comerindustries.com - info@comerindustries.com

Updated information about our sales network and product ranges is available at: **www.comerindustries.com**
Comer Industries shall have no liability for the completeness and accuracy of the information and cannot be held liable for any third-party claims or losses of any damages. The information represented in this catalogue can be revised at any time without notice.